ROYAL MODEL
DIORAMA ACCESSORIES
Royal Model by Reale Roberto
P.O.Box 25 - 95039 - Trecastagni (CT) ITALY

MICRODETAILS SET
No. 186
1/35 Scale

Pz. Kpfw 35 (t) / Skoda LT vz. 35



The parts included in this kit are to be assembled in conjunction with the CMK kit. For best results in the assembling of photo-etched and resin parts usecyanoacrylate glue.Always remember to use cyanoacrylate glue in a well ventilated area. Before assembly be sure to remove all parts to be substituted with photo-etched and resin parts.It is advised before assembly to study well the instructions which accompany this MICRODETAILS SET plus any other sufficient documentation.Note that some particulars illustrated in the instructions have been enlarged for easy identification.

○ Substitute the plastic part with the photo-etched or resin part.
● Repeat same operation for the other side.

[00] Resin part
(00) Photo-etched part

1 Turret details assembly.

MG 37 (t) assembly.
Make 2 pieces.

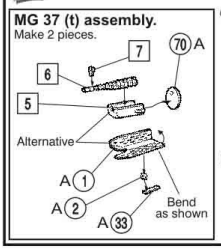

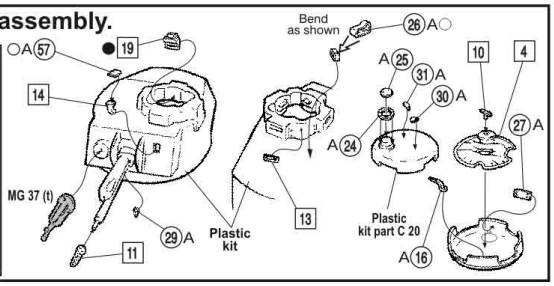

2 Mud guards assembly.

(Repeat the same operation for the other side.)

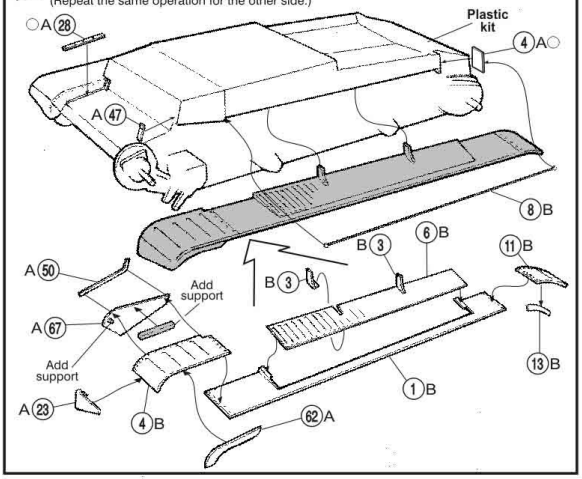

3 Details assembly.

(Make 4 pieces.)

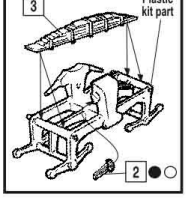

4 Details assembly.

(Repeat the same operation for the other side.)

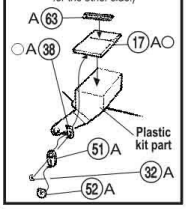

5 Hull details assembly.

Visors details assembly.

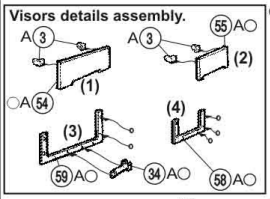

6 Hull details assembly.

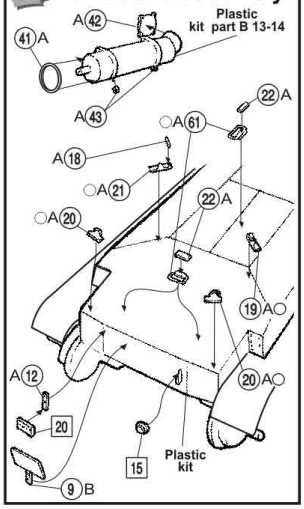

7 Bracket details assembly.

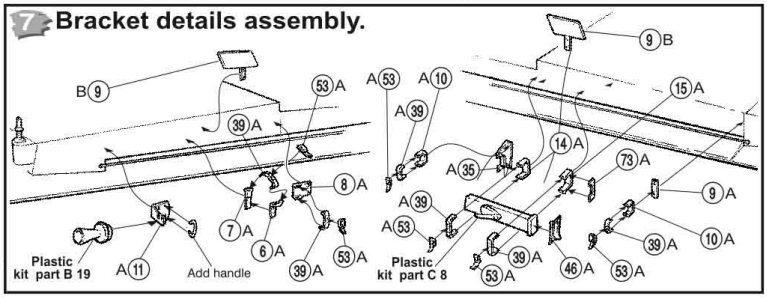

8 Jerrycans holder assembly.

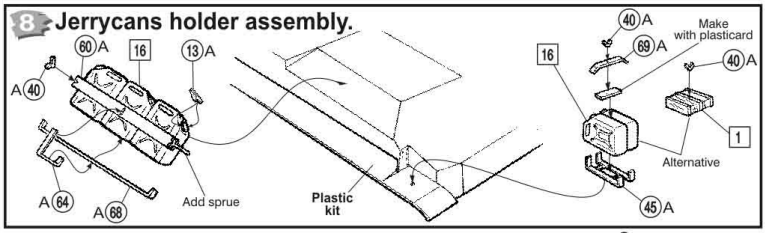

© (1998) ROYAL MODEL

ROYAL MODEL

DIORAMA - ACCESSORIES

ROYAL MODEL by Roberto Reale
P.O. Box 25 - 95039 Trecastagni (CT) ITALY

No. 186

Pz. Kpfw 35 (t) / Skoda LT vz. 35

RESIN PARTS SCHEME

Remove the shaded area.

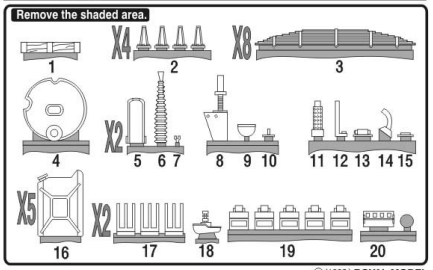

©(1998) ROYAL MODEL