ROYAL MODEL
DIORAMA ACCESSORIES
Royal Model by Reale Roberto
P.O.Box 25 - 95039 - Trecastagni (CT) ITALY

MICRODETAILS SET
No. 170
1/35 Scale

M 24 CHAFFEE



The parts included in this kit are to be assembled in conjunction with the Italeri kit No. 244. For best results in the assembling of photo-etched and resin parts usecyanoacrylate glue.Always remember to use cyanoacrylate glue in a well ventilated area. Before assembly be sure to remove all parts to be substituted with photo-etched and resin parts.It is advised before assembly to study well the instructions which accompany this MICRODETAILS SET plus any other sufficient documentation.Note that some particulars

○ Substitute the plastic part with the photo-etched or resin part.
● Repeat same operation for the other side.
[00] Resin part
(00) Photo-etched part

1 Turret details assembly.

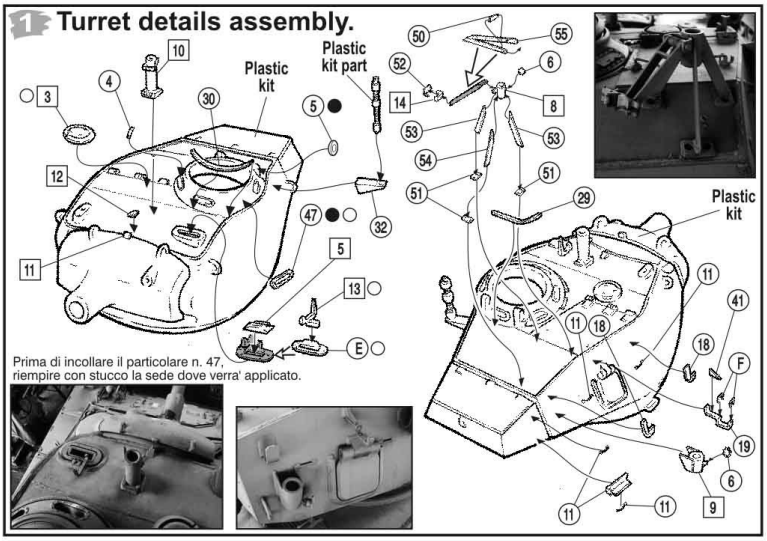

Prima di incollare il particolare n. 47, riempire con stucco la sede dove verra' applicato.

2 Bracket details assembly.

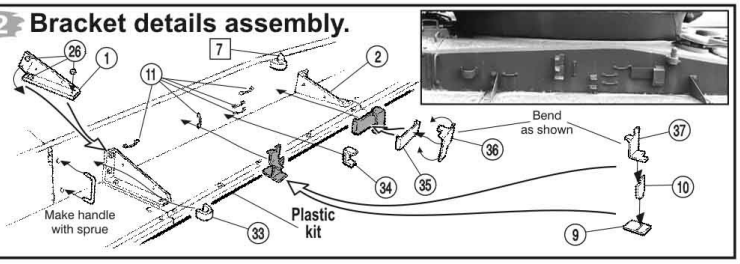

3 Hupper hull details assembly.

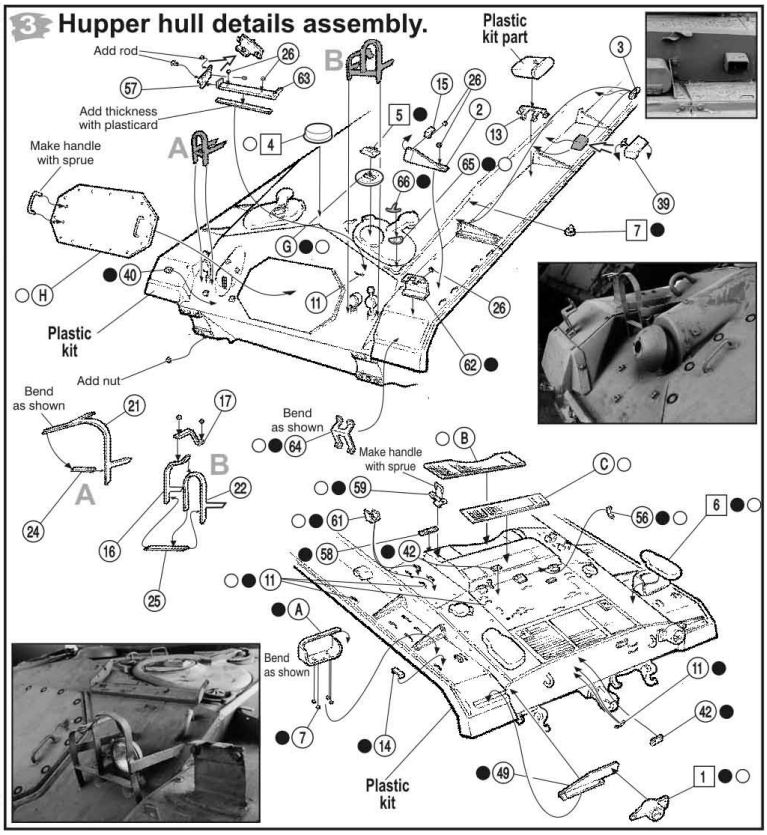

4 Back panel details assembly.

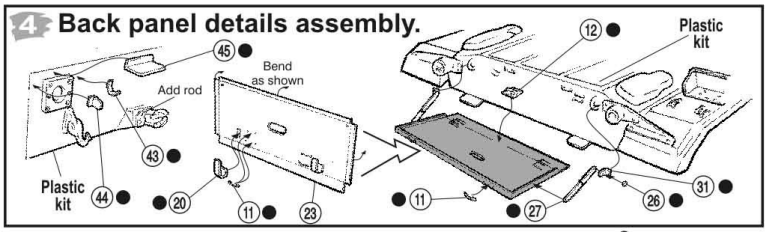

©(1998) ROYAL MODEL

ROYAL MODEL ®
DIORAMA ACCESSORIES
ROYAL MODEL by Roberto Reale
P.O. Box 24 - 95039 Trecastagni (CT) ITALY

No. 170

M 24 CHAFFE

RESIN PARTS SCHEME

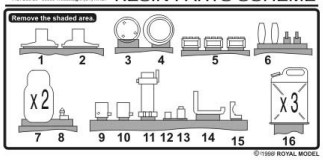

©1999 ROYAL MODEL