ROYAL MODEL
DIORAMA ACCESSORIES
Royal Model by Reale Roberto,
P.O. BOX 25 - 95039 - Trecastagni (CT) ITALY

Sturmtiger
interior details

NO. 096
1/35

super interiordetails

The parts included in this kit are to be assembled in conjunction with the Tamiya kit NO. 35177.
For best results in the assembling of photo-etched and resin parts use cyanoacrylate glue.
Always remember to use cyanoacrylate glue in a well ventilated area.
Before assembly be sure to remove all parts to be substituted with photo-etched and resin parts.
It is advised before assembly to study well the instructions which accompany this SUPER INTERIODETAILS plus any other sufficient documentation.
Note that some particulars illustrated in the instructions have been enlarged for easy identification.

(00) Photo-etched part.
00 Resin part.
● Repeat same operation for the other side.
○ Substitute the plastic part with the photo-etched part.

Resin parts scheme.

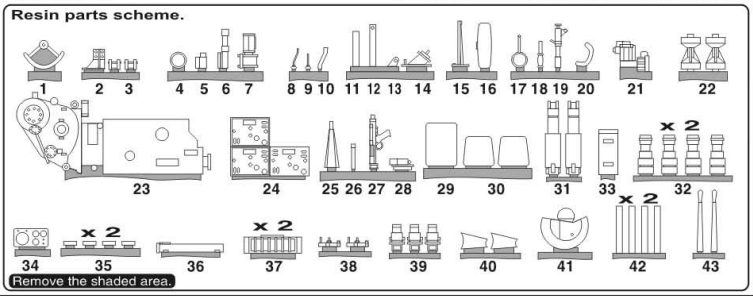

1 Floor modification.

The floor of the plastic kit as to be only partially used. Therefore, remove the shaded part as shown and use the remaining one.

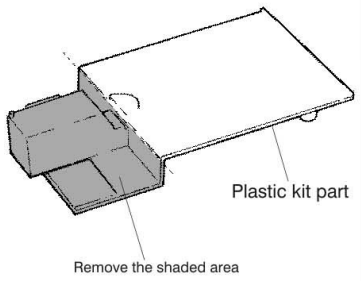

2 Trasmission assembly.

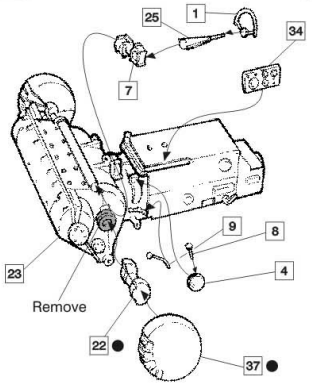

3 Hull interior details assembly.

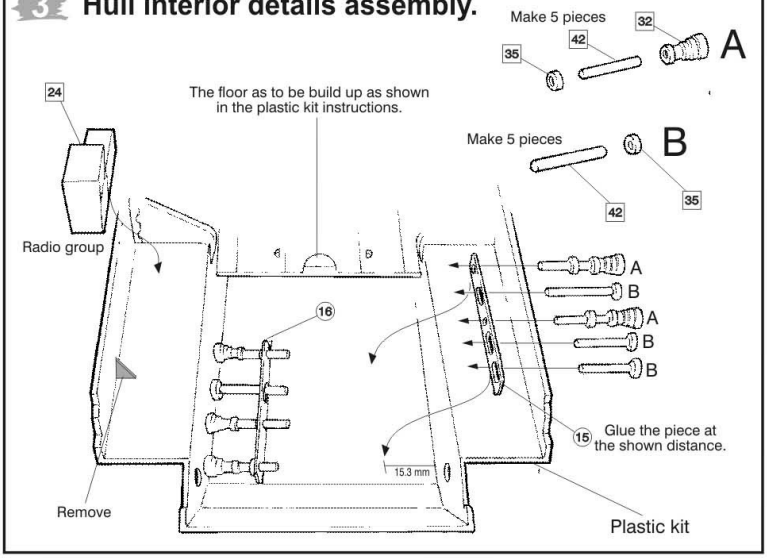

4 Hull interior details assembly.

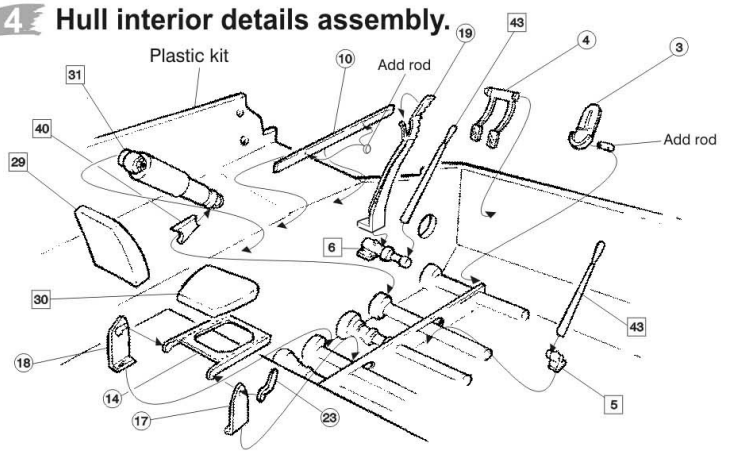

5 Hull interior details assembly.



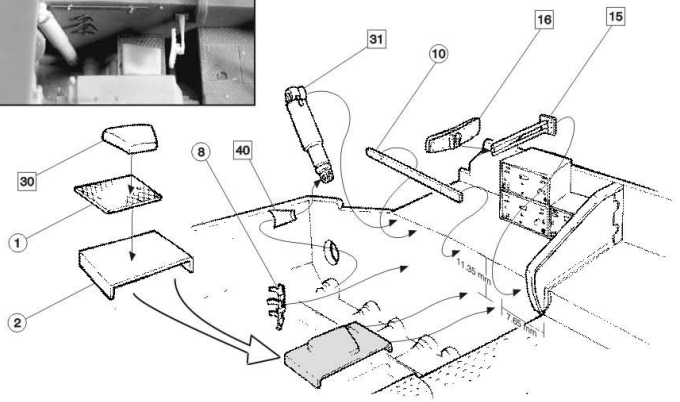

6 Hull interior details assembly.

Arrange the trasmission inside the hull as shown, considering that the back part as to be put under the floor.

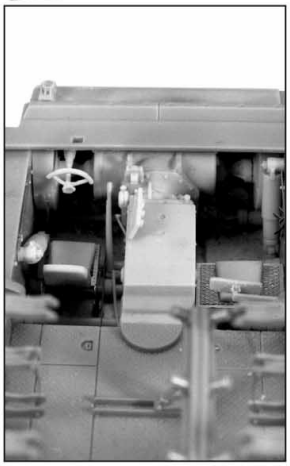

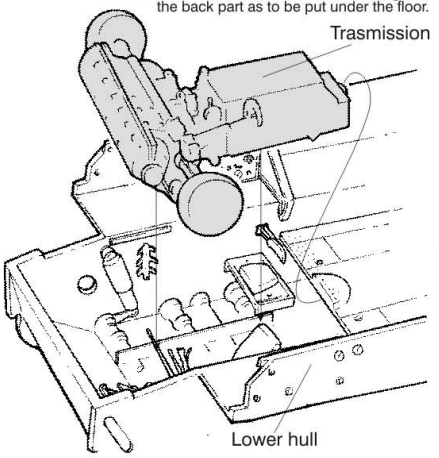

7 Turret interior details assembly.

Breech block

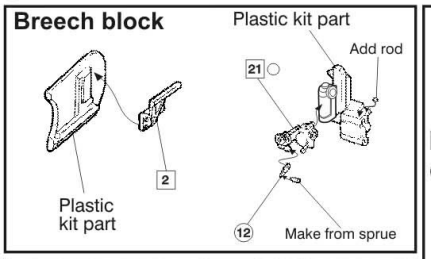

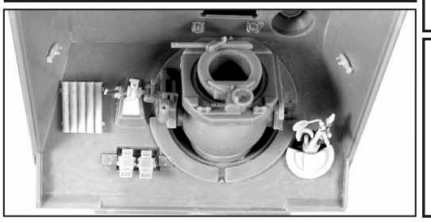

Machine gun

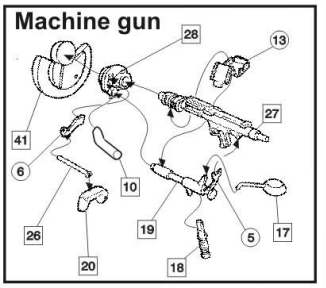

Ammunition rack

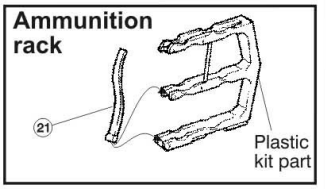

8 Turret interior details assembly.

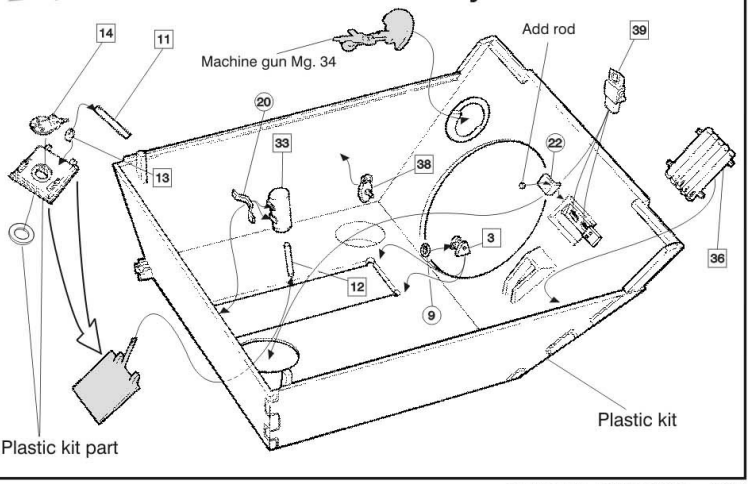

Drawings by **ROYAL MODEL** (1995)