ROYAL MODEL®
DIORAMA ACCESSORIES

Bofors

Item no. 560
1/35 scale

THIS PART SUBSTITUTE THE PLASTIC PART N...
MAKE 2 PIECES
ADD ROD
TO BEND
PLASTIC KIT PART
ADD NUT
BE CAREFUL
REPEAT SAME OPERATION FOR THE OTHER SIDE
RESIN PART
REMOVE OR SUBSTITUTE THE PLASTIC KIT PART WITH ROYAL MODEL PART
TO BE HEATED
TO FOLD

The parts included in this kit are to be assembled in conjunction with the Italeri or AFV kit. For best results in the assembling of photo-etched and resin parts use cyanoacrylate glue. Always remember to use cyanoacrylate glue in a well ventilated area. Before assembling be sure to remove all the parts to be substituted with photo-etched parts. It is advisable before assembling to study well the instructions which accompany this kit plus any other sufficient documentation.It is advise to heat the metal parts before glueing, once the metal is hot it will be easier to bend.

1

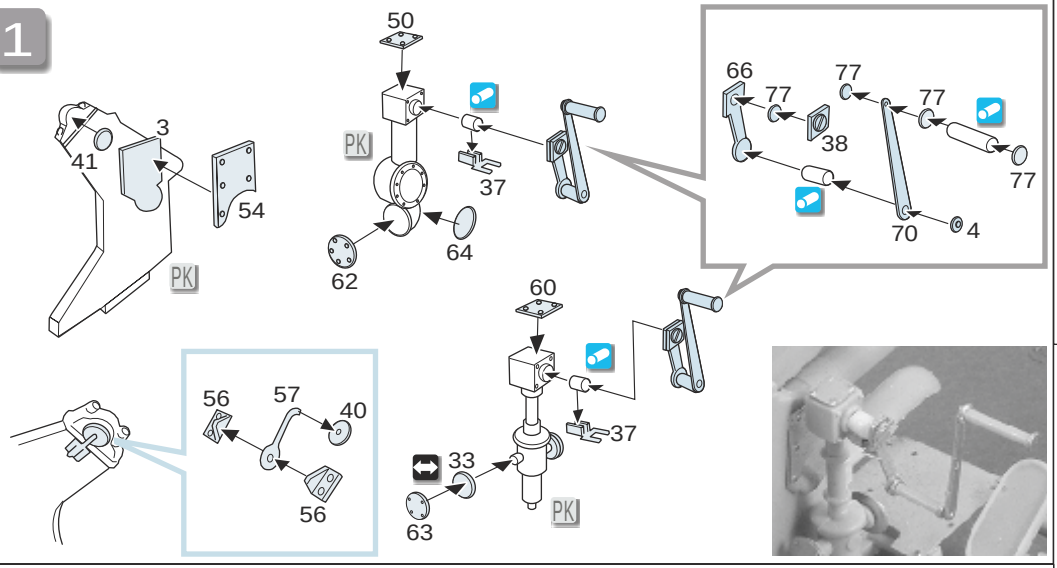

2

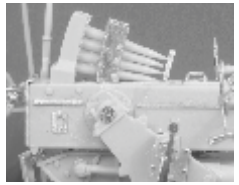

3

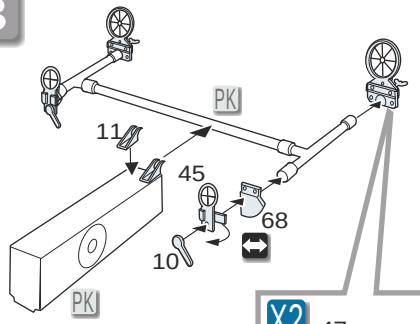

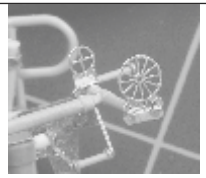

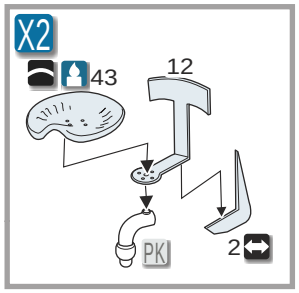



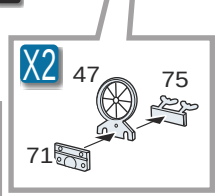

4



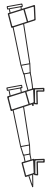

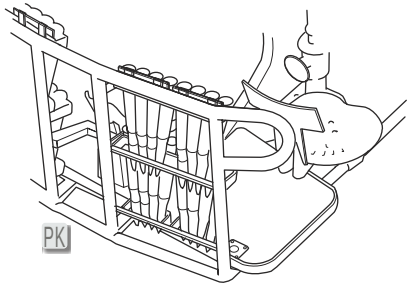

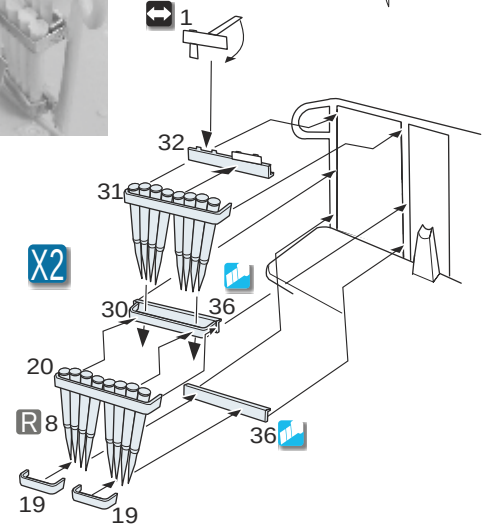

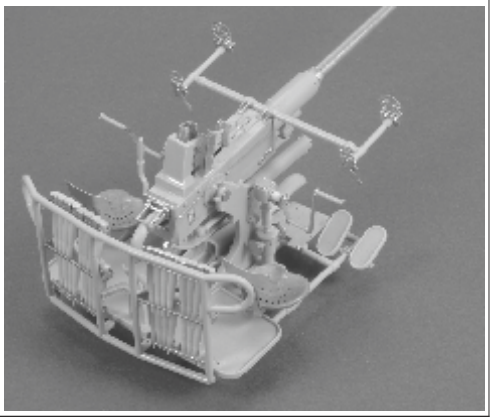

ROYAL MODEL - PO BOX 25 - 95039 TRECASTAGNI (CT) ITALY
E-mail: info@royalmodel.com - Internet: www.royalmodel.com ©(2009)ROYAL MODEL