ROYAL MODEL
DIORAMA ACCESSORIES

MICRODETAILS SET
1/35 Scale

ITEM NO. 393

SU-85/SU-122

The parts included in this kit are to be assembled in conjunction with the **Tamiya kit No.35072/35093**. For best results in the assembling of photo-etched and resin parts use cyanoacrylate glue. Always remember to use cyanoacrylate glue in a well ventilated area. Before assembling be sure to remove all the parts to be substituted with photo-etched parts. It is advisable before assembling to study well the instructions which accompany this kit plus any other sufficient documentation. It is advise to heat the metal parts before glueing, once the metal is hot it will be easier to bend.

X2 MAKE 2 PIECES
REPEAT SAME OPERATION FOR THE OTHER SIDE
THIS PART SUBSTITUTE THE PLASTIC PART N...
REMOVE OR SUBSTITUTE THE PLASTIC KIT PART WITH ROYAL MODEL PART
PK PLASTIC KIT PART
TO FOLD
ADD ROD
TO BEND
ADD NUT
BE CAREFUL
TO BE HEATED

1

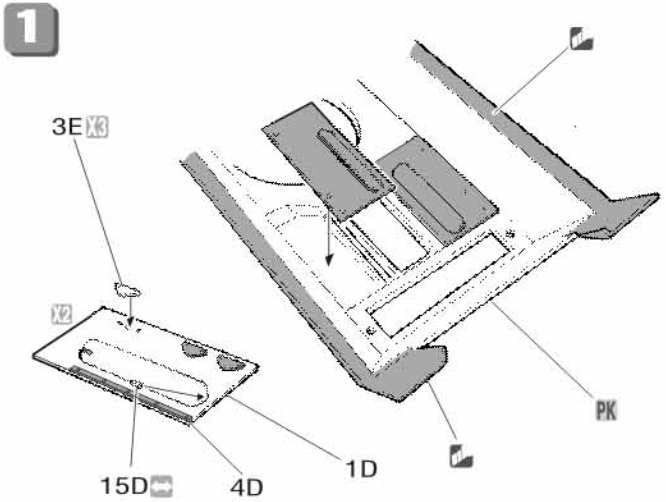

2

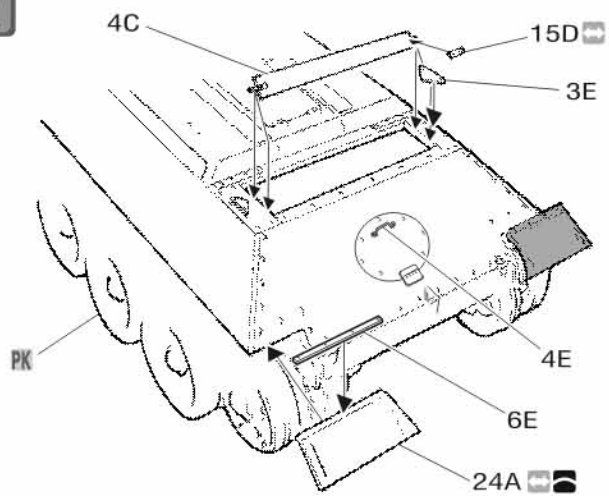

3

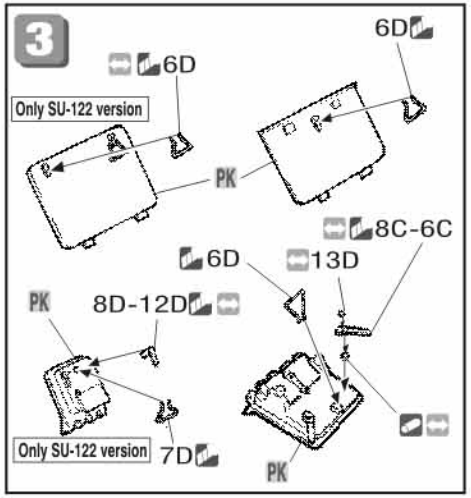

4

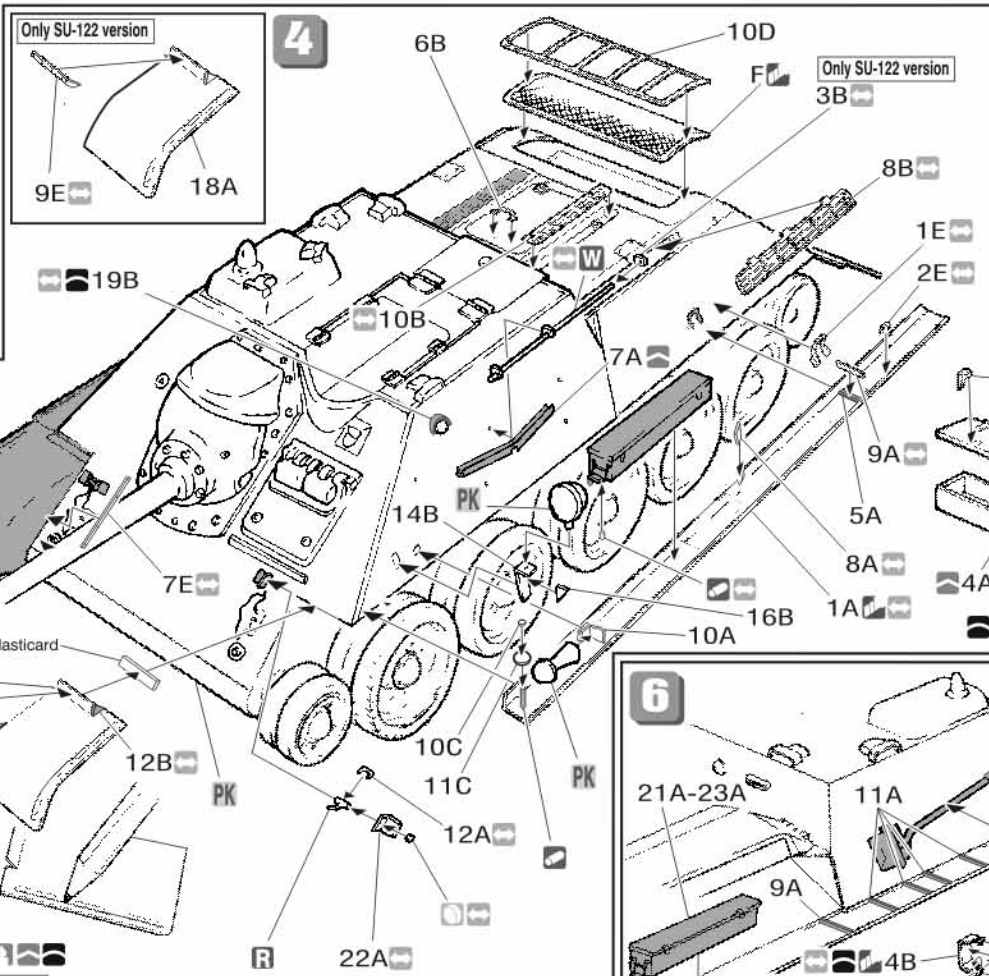

5 Wheels painting.

*Before painting the wheel frame colour the whole wheel black.

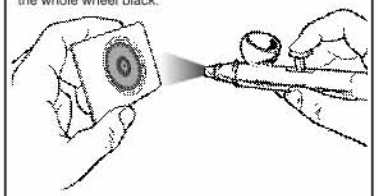

Hold template no. 3D still in position with finger tips and spray whell frame with paint of desidered colour as shown above.

6

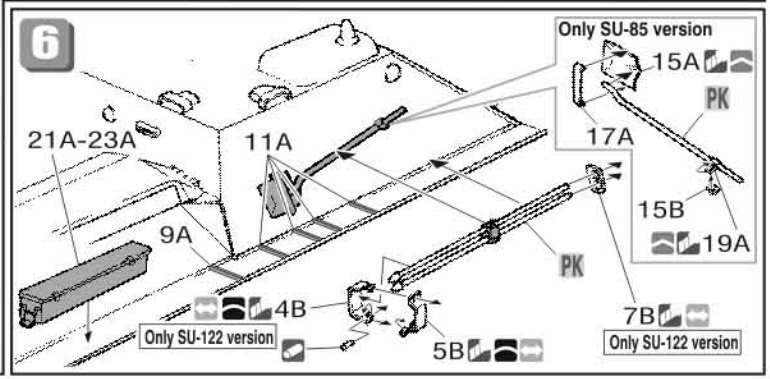

7 X4

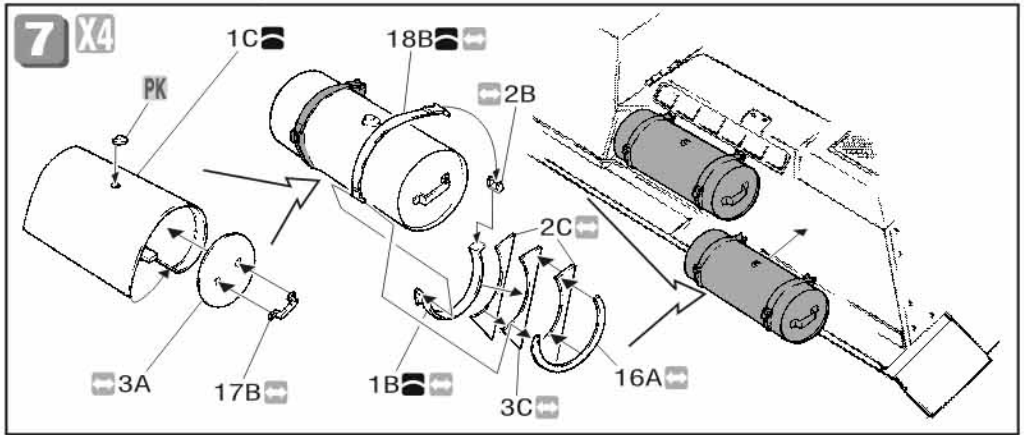

ROYAL MODEL BY REALE ROBERTO - PO BOX 25 - 95039 TRECASTAGNI (CT) ITALY Tel. +39 95 780 0707-Fax +39 95 780 99 11
e-mail:info@royalmodel.com - Internet:www.royalmodel.com
©(2004) ROYAL MODEL