ROYAL MODEL
DIORAMA ACCESSORIES
Royal Model by Reale Roberto
P.O. Box 25 - 95039 - Trecastagni (CT) ITALY

MICRODETAILS SET
No. 326
1/35 Scale

Sd.Kfz. 222 (part 2°)

The parts included in this kit are to be assembled in conjunction with the Tamiya kit no. 35051. For best results in the assembling of photo-etched and resin parts use cyanoacrylate glue. Always remember to use cyanoacrylate glue in a well ventilated area. Before assembling be sure to remove all the parts to be substituted with photo-etched and resin parts. It is advisable before assembling to study well the instructions which accompany this MICRODETAILS SET plus any other sufficient documentation.

If ulterior details are required for your model it is possible to use added set ROYAL MODEL No. 325-344.

○ Substitute the plastic part with the photo-etched or resin part ● Repeat the same operation for the other side [R] Resin part ✹ To be heated ◆ Facultative

WIRE

- Wire A ⌀ 0,9 mm
- Wire B ⌀ 0,6 mm
- Wire C ⌀ 0,4 mm
- Wire D ⌀ 0,3 mm

1 Hull interior details assembly.

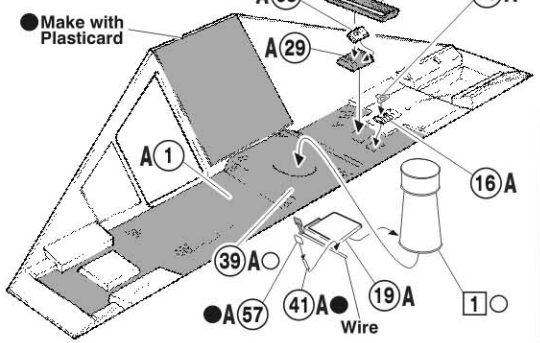

2 Hull interior details assembly.

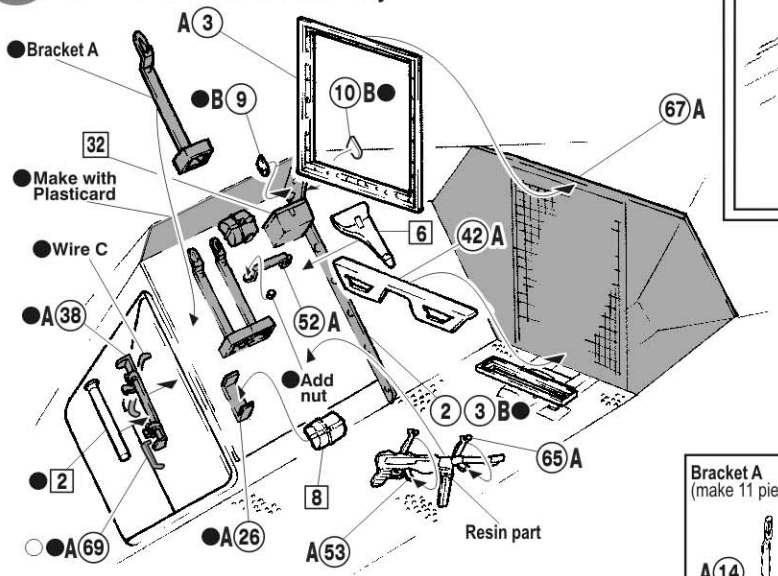

3 Hull interior details assembly.

Bracket C (make 3 pieces)

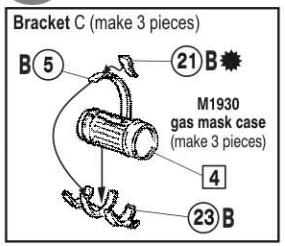

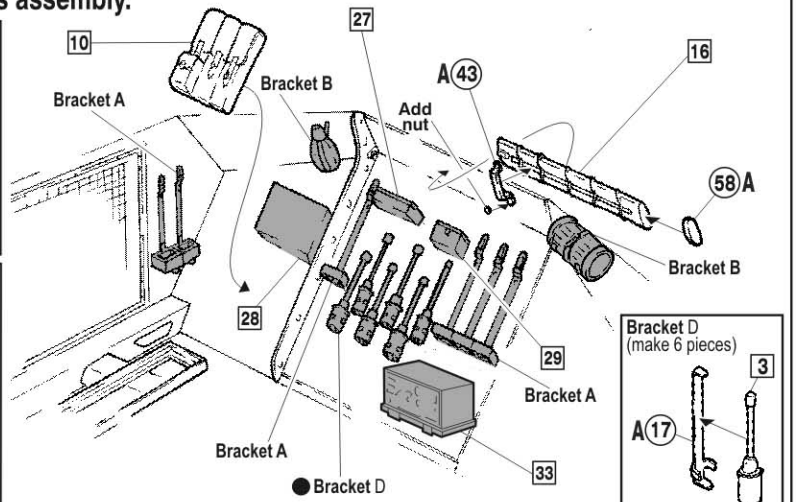

Bracket D (make 6 pieces)

4 Hull interior details assembly.

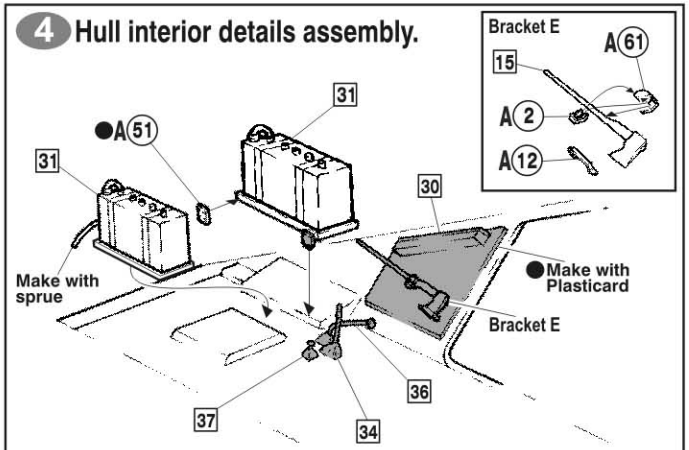

Bracket A (make 11 pieces)

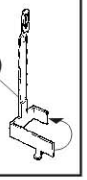

Bracket B (make 3 pieces)

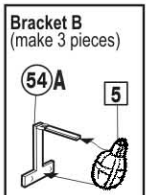

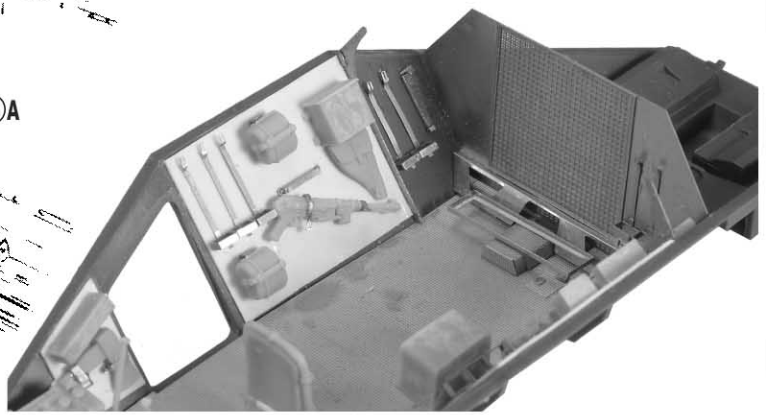

5 Hull interior details assembly.

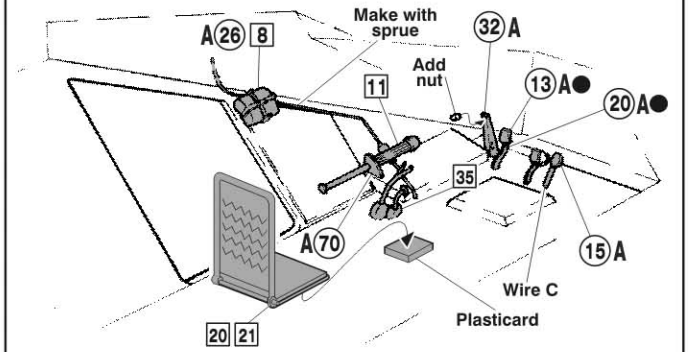

6 Hull interior details assembly.

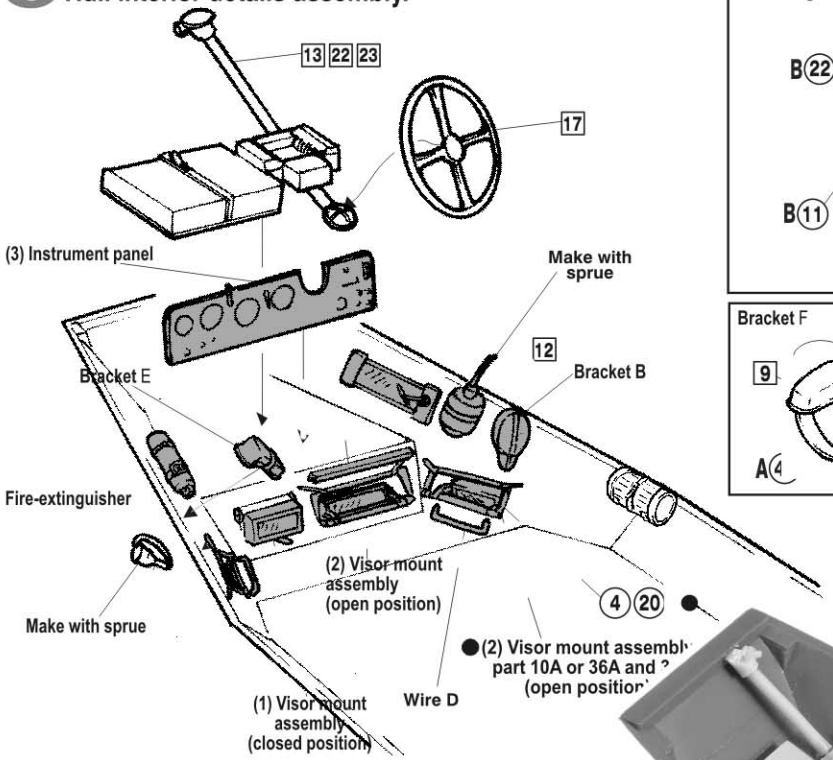

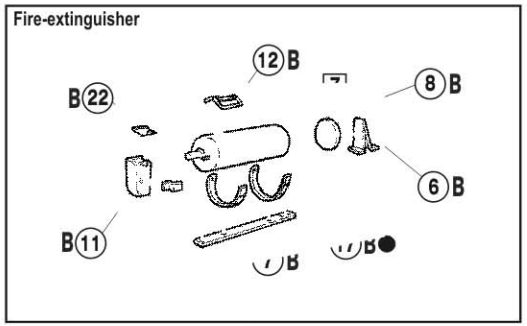

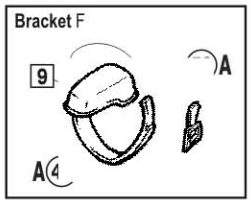

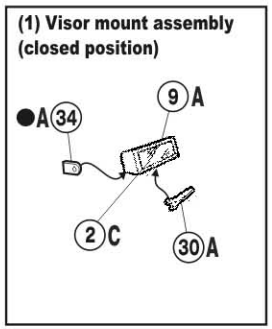

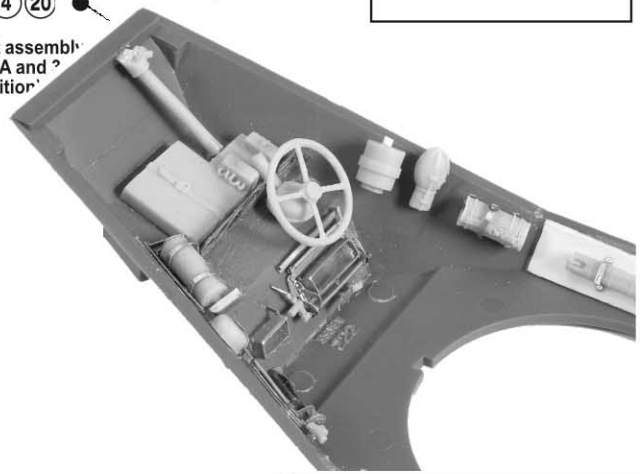

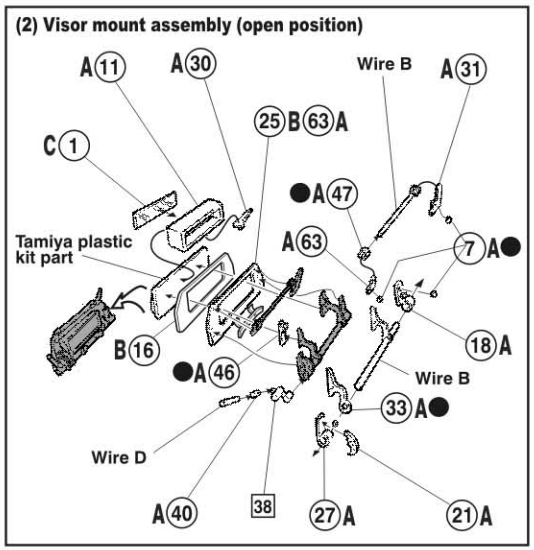

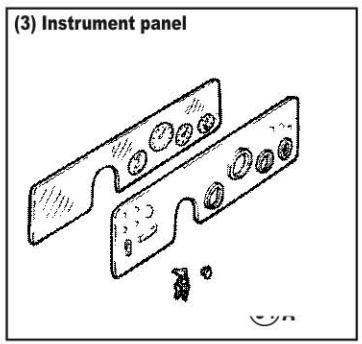

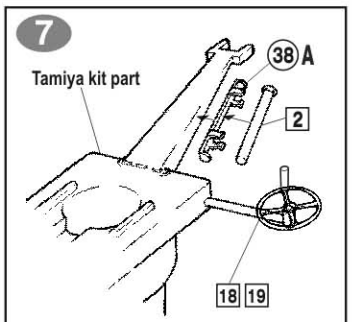

8 Turret interior details assembly.

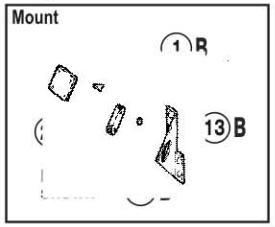

You are advise that for a best result to assemling the parts 48-35-5-4A you must to use the photo etched turret of Royal Model set no. 325.

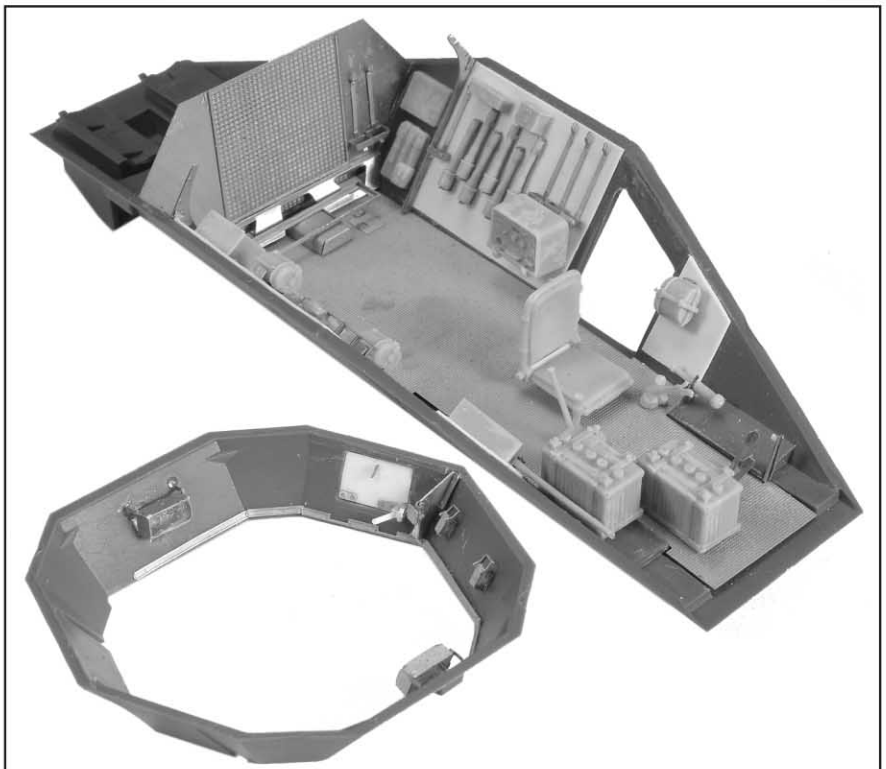

© (2004) ROYAL MODEL