ROYAL MODEL
DIORAMA ACCESSORIES

ITEM NO. 319

MICRODETAILS SET
1/35 Scale

Sd. Kz. 164 "HORNISSE/NASHORN" (part 1)

The parts included in this kit are to be assembled in conjunction with the **Dragon** kit. For best results in the assembling of photo-etched and resin parts use cyanoacrylate glue. Always remember to use cyanoacrylate glue in a well ventilated area. Before assembling be sure to remove all the parts to be substituted with photo-etched and resin parts. It is advisable before assembling to study well the instructions which accompany this **MICRODETAILS SET** plus any other sufficient documentation. If is advise to heat the metal parts before glueing, once the metal is hot it will be easier to bend.

If ulterior details are required for your model it is possible to use added set ROYAL MODEL No. 320

BE CAREFUL | REPEAT SAME OPERATION | THE PART ASSEMBLED THE PLASTIC PART IS... | OPEN HOLE | MAKE 3 PIECES | SAND POSI | RESIN PART | PHOTO-ETCHED PART
ATTENTION! ADD SUBSTITUTE THE PART WITH ROYAL MODEL PART | TO BE HEATED | OPTIONAL | FILE HOLE | PK PLASTIC KIT PART | ADD NUT | TO FOLD | TO BEND

1

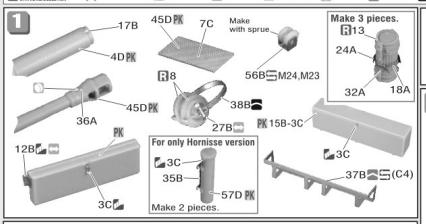

2 *For only Hornisse version

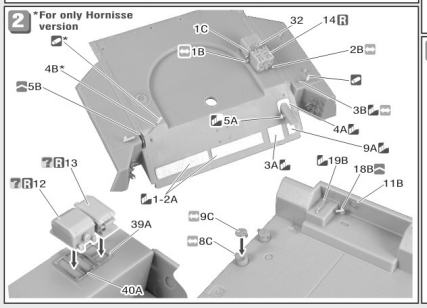

3

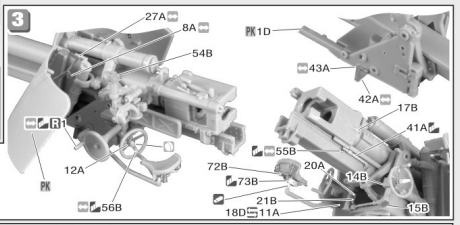

4 Radio assembly (optional).

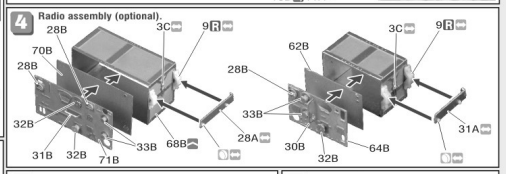

5 Substitute the Dragon part 10-11-12-13N etc. as shown.

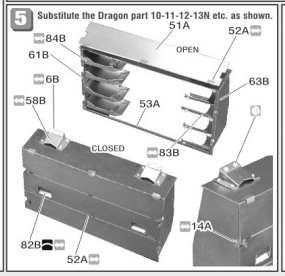

6

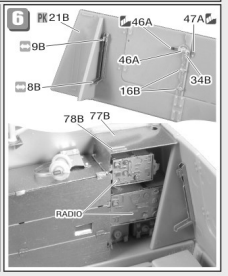

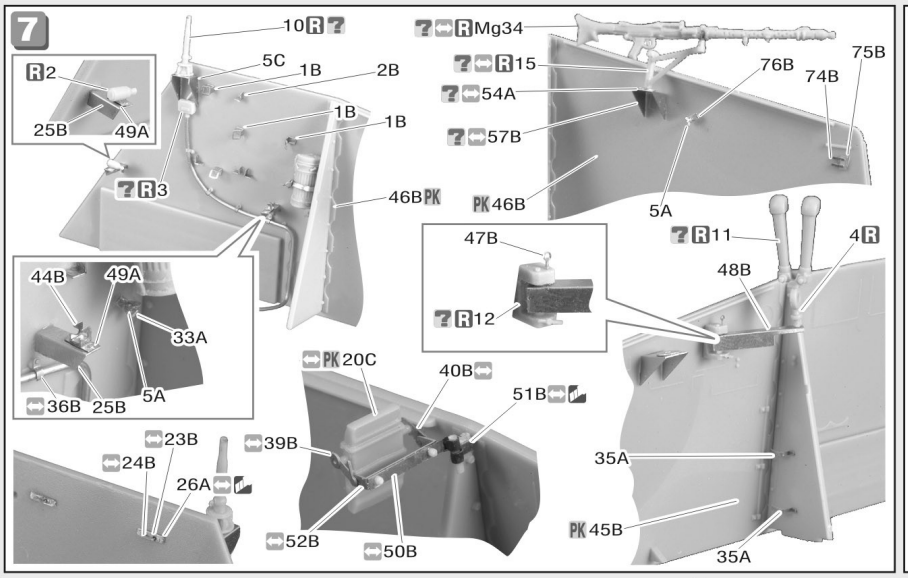

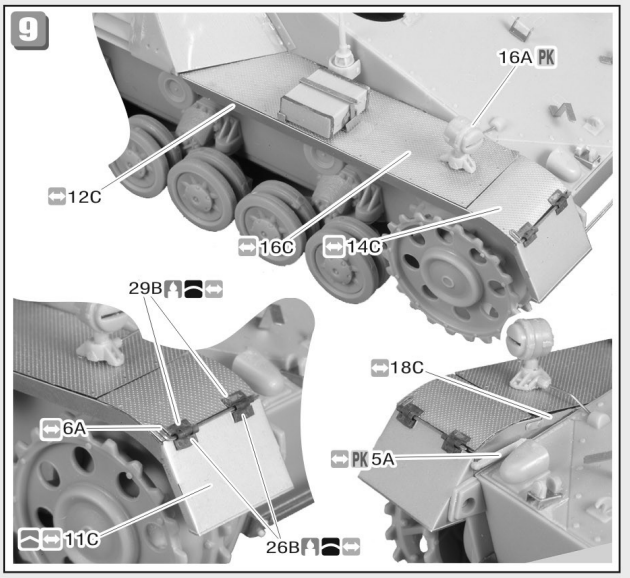

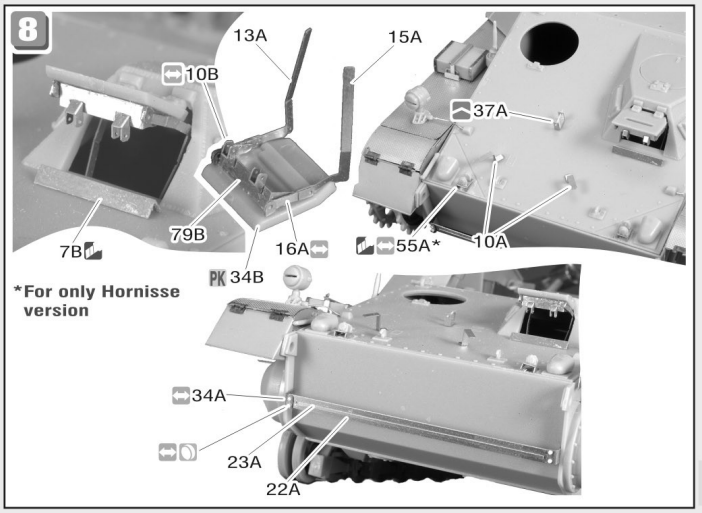

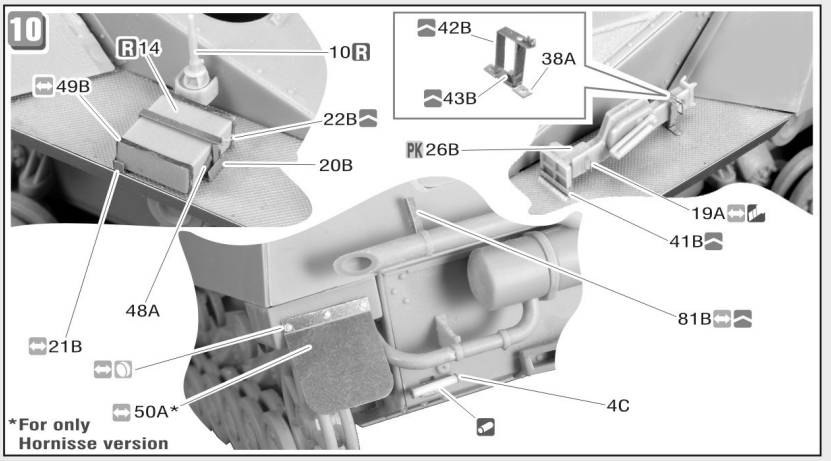

ROYAL MODEL BY REALE ROBERTO - PO BOX 25 - 95039 TRECASTAGNI (CT) ITALY
Tel. +39 95 780 0707-Fax +39 95 780 99 11
e-mail:info@royalmodel.com - Internet:www.royalmodel.com
© (2003) ROYAL MODEL