ROYAL MODEL

DIORAMA ACCESSORIES
Royal Model by Reale Roberto
P.O. Box 25 - 95039 - Trecastagni (CT) ITALY

MICRODETAILS SET
No. 310
1/35 Scale

M 26 PERSHING

The parts included in this kit are to be assembled in conjunction with the TAMIYA kit no. 35254. For best results in the assembling of photo-etched and resin parts use cyanoacrylate glue. Always remember to use cyanoacrylate glue in a well ventilated area. Before assembling be sure to remove all the parts to be substituted with photo-etched and resin parts. It is advisable before assembling to study well the instructions which accompany this MICRODETAILS SET plus any other sufficient documentation.

○ Substitute the plastic part with the photo-etched or resin part ● Repeat the same operation for the other side R Resin part ✹ To be heated ◆ Facultative

1 Details assembly.

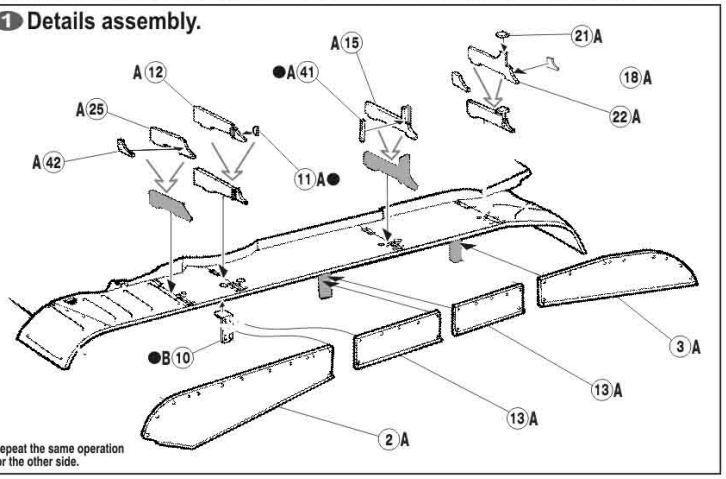

Repeat the same operation for the other side.

2 Details assembly.

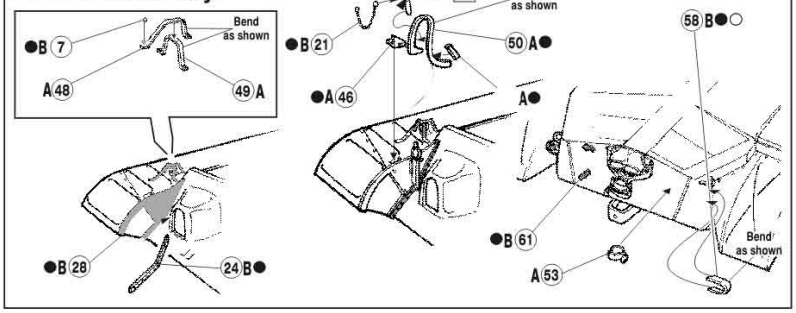

3 Turret details assembly.

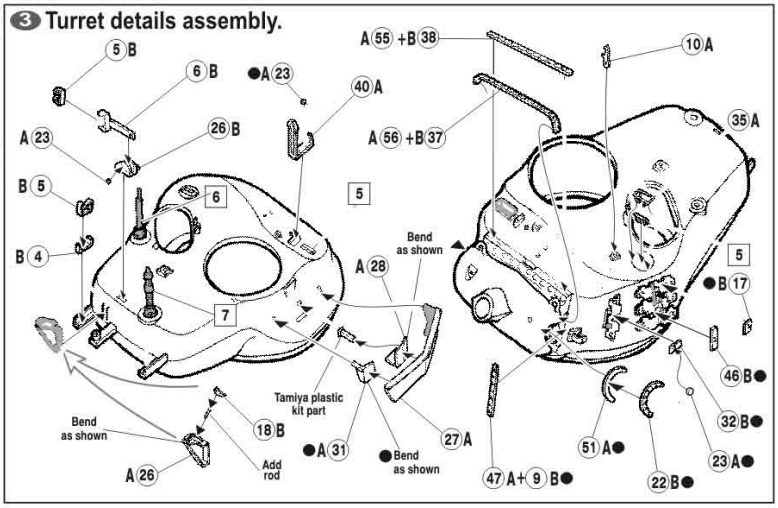

4 Hatchs details assembly.

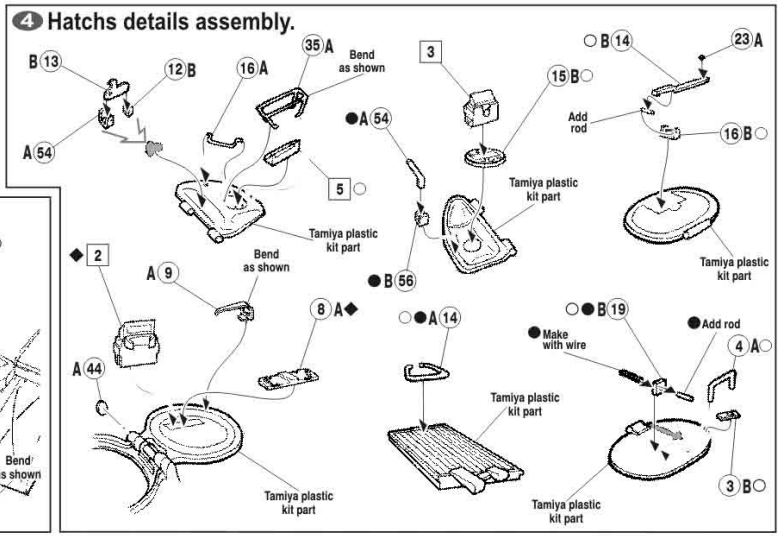

5 .50 Cal Machine Gun details assembly.

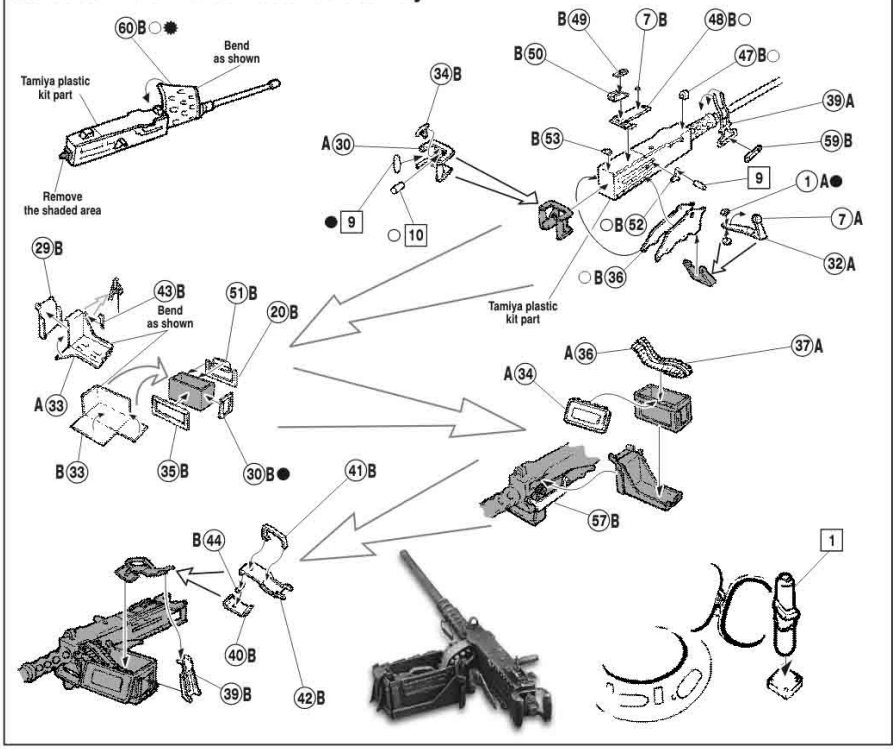

6 Details assembly.

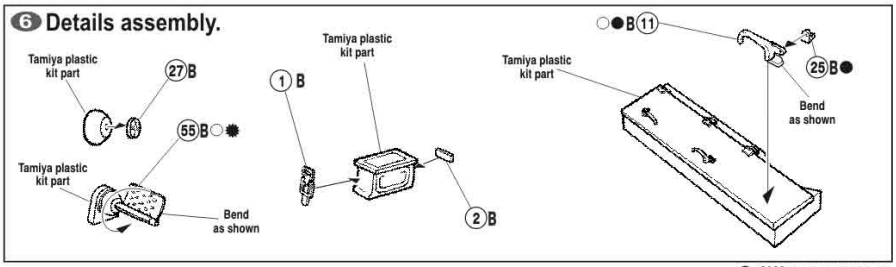

© (2003) ROYAL MODEL