ROYAL MODEL

DIORAMA ACCESSORIES
Royal Model by Reale Roberto
P.O. Box 25 - 95039 - Trecastagni (CT) ITALY

MICRODETAILS SET
No. 301
1/35 Scale

MARDER III auf Gw.38 T-INTERIOR DETAILS

The parts included in this kit are to be assembled in conjunction with the Tamiya kit no. 35248. For best results in the assembling of photo-etched and resin parts use cyanoacrylate glue. Always remember to use cyanoacrylate glue in a well ventilated area. Before assembling be sure to remove all the parts to be substituted with photo-etched and resin parts. It is advisable before assembling to study well the instructions which accompany this MICRODETAILS SET plus any other sufficient documentation.

If ulterior details are required for your model it is possible to use added set ROYAL MODEL no. 261.

○ Substitute the plastic part with the photo-etched or resin part ● Repeat the same operation for the other side [R] Resin part ✹ To be heated ◆ Facultative

1 Transmission details assembly.



Seats assembly.

Make 2 pieces.

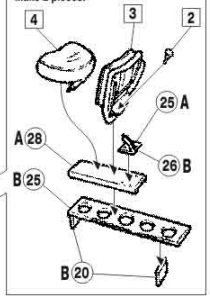

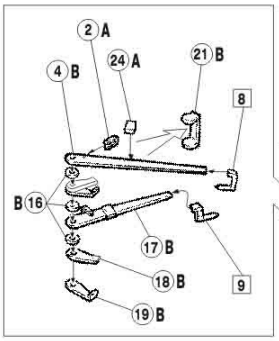

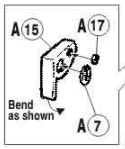

2 Fighting compartment assembly.

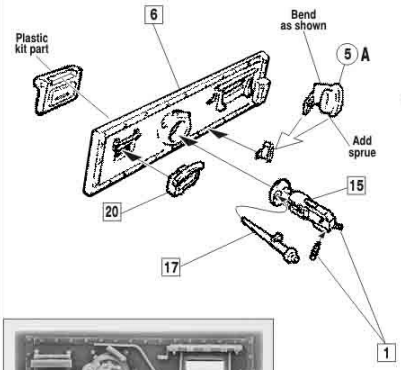

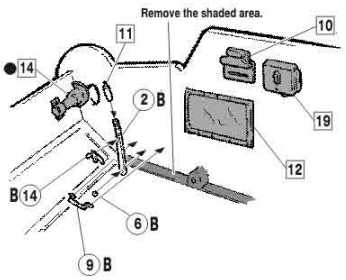

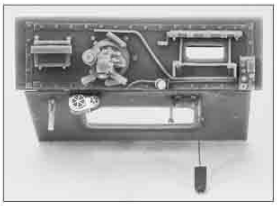



3 Radios assembly.

FU 5 (10 Watt) radio set.

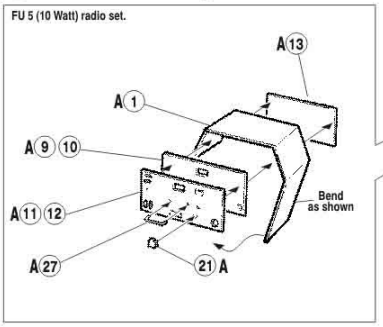

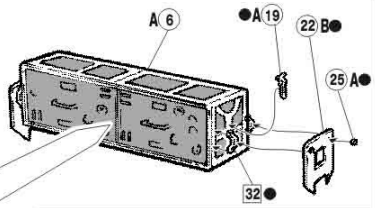

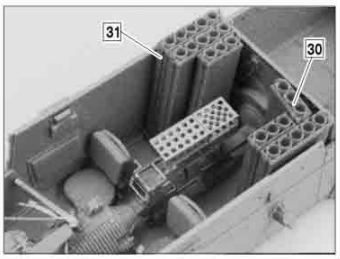

❹Fighting compartment assembly.





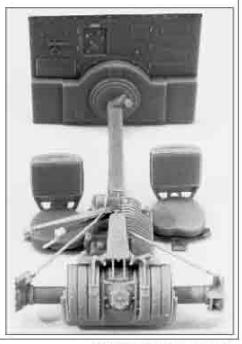

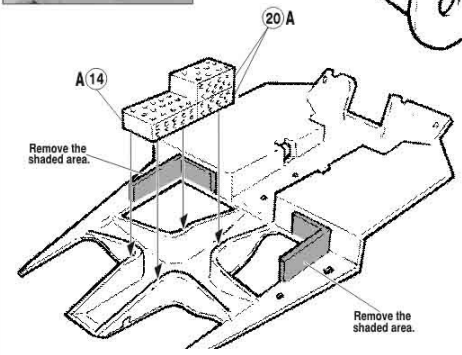

©(2002) ROYAL MODEL

Other Items Available.

1/35 Scale


261-MARDER III auf Gw.38 T


289-Red Tiles

288-Cobblestones




290-Sd. Kfz. 11 3t


300-MARDER III Ausf H (part 2')


301-MARDER III auf Gw.38 T-Interior Details