ROYAL MODEL
DIORAMA ACCESSORIES

Royal Model by Roberto Reale
PO Box 25 - 95039 - Trecastagni (CT) ITALY

HANOMAG SdKfz 251 D 1/35

NO. 086

microdetails set

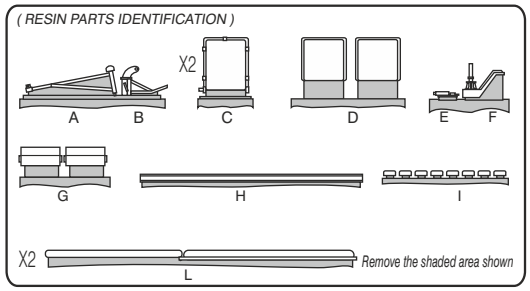

○ Substitute the plastic part with the photo-etched part.

● Repeat same operation for the other side.

The parts included in this kit are to be assembled in conjunction with the Tamiya kit.

For best results in the assembling of photo-etched and resin parts use cyanoacrylate glue.

Always remember to use cyanoacrylate glue in a well ventilated area.

Before assembly be sure to remove all parts to be substituted with photo-etched and resin parts.

It is advised before assembly to study well the instructions which accompany this MICRODETAILS SET plus any other sufficient documentation.

Note that some particulars illustrated in the instructions have been enlarged for easy identification.

If distortion occurs in some resin parts due to humidity immerge in hot water and reform.

Lower hull details assembly.

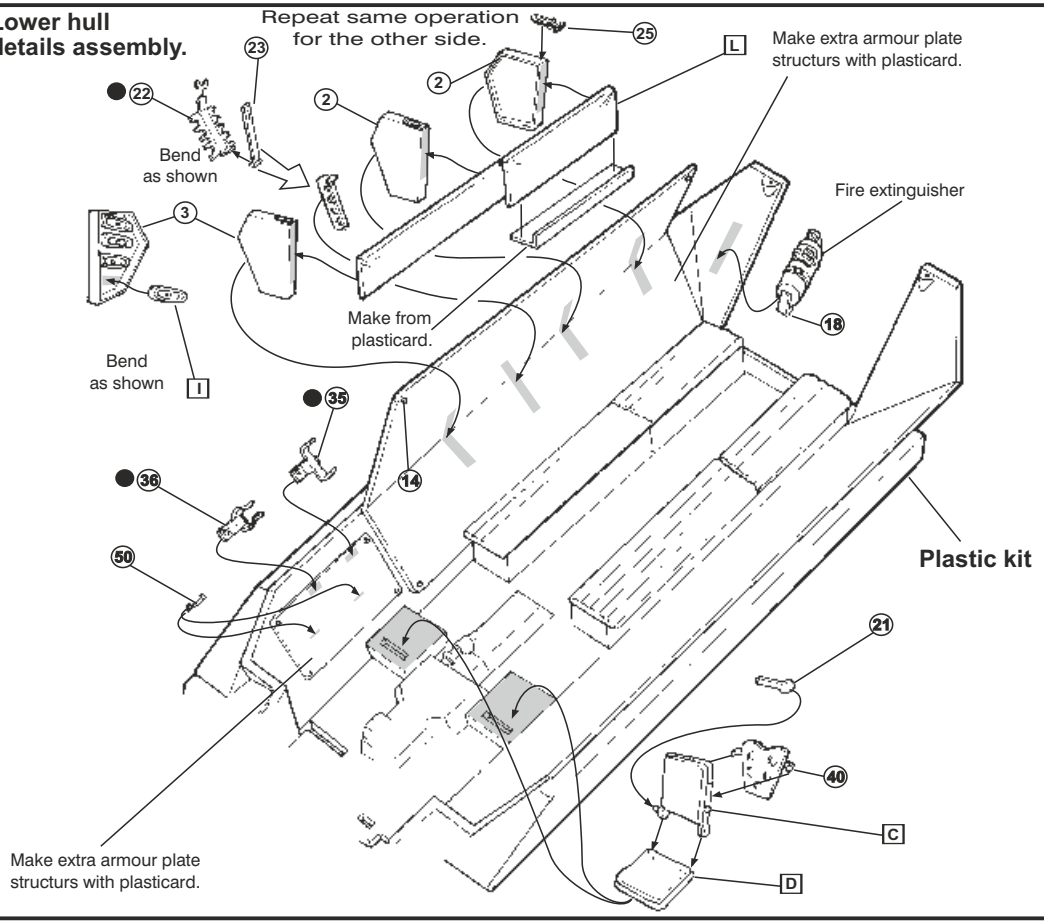

Interior details assembly.

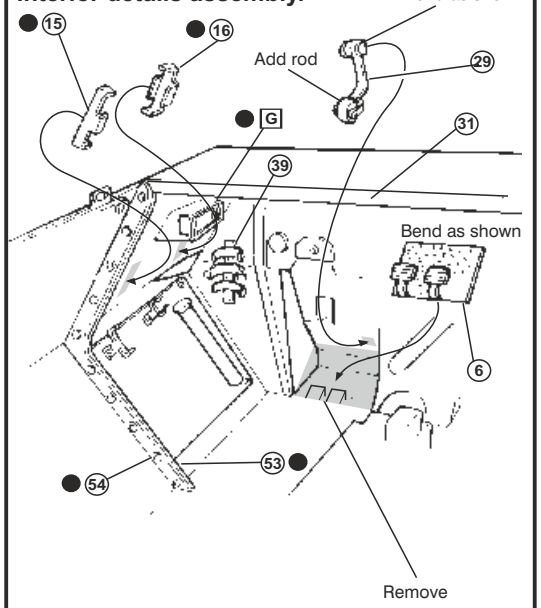

Rear hull details assembly.

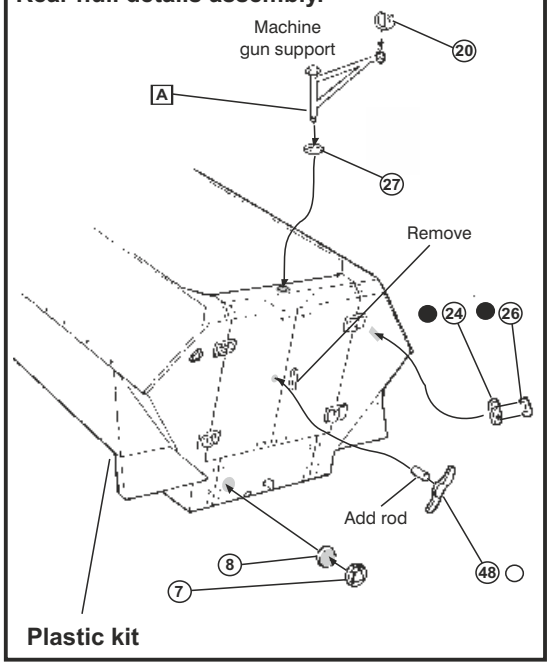

Interior details assembly.

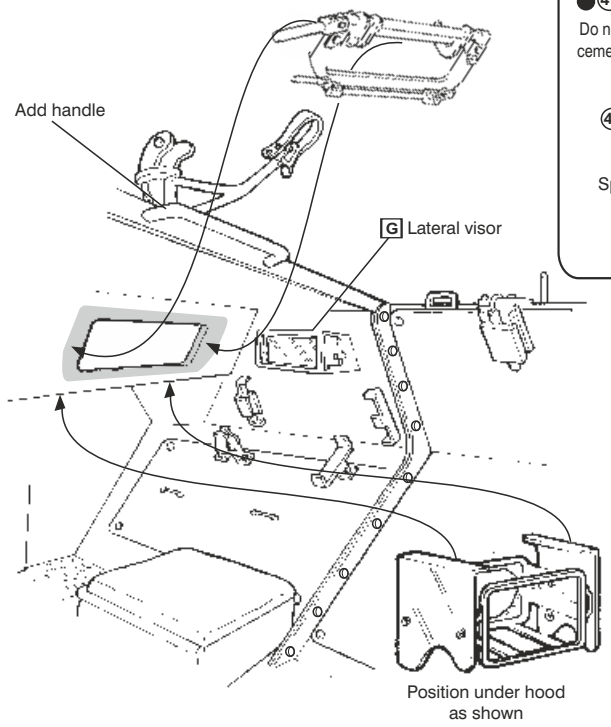

Protective glass visor mount assembly.

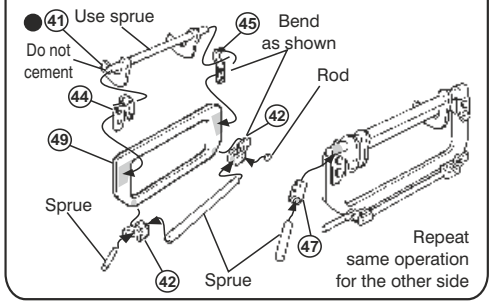

Radio set rack assembly.

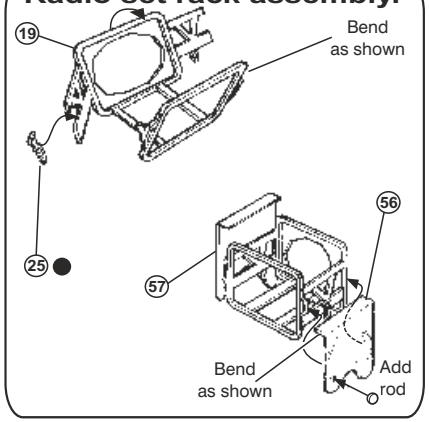

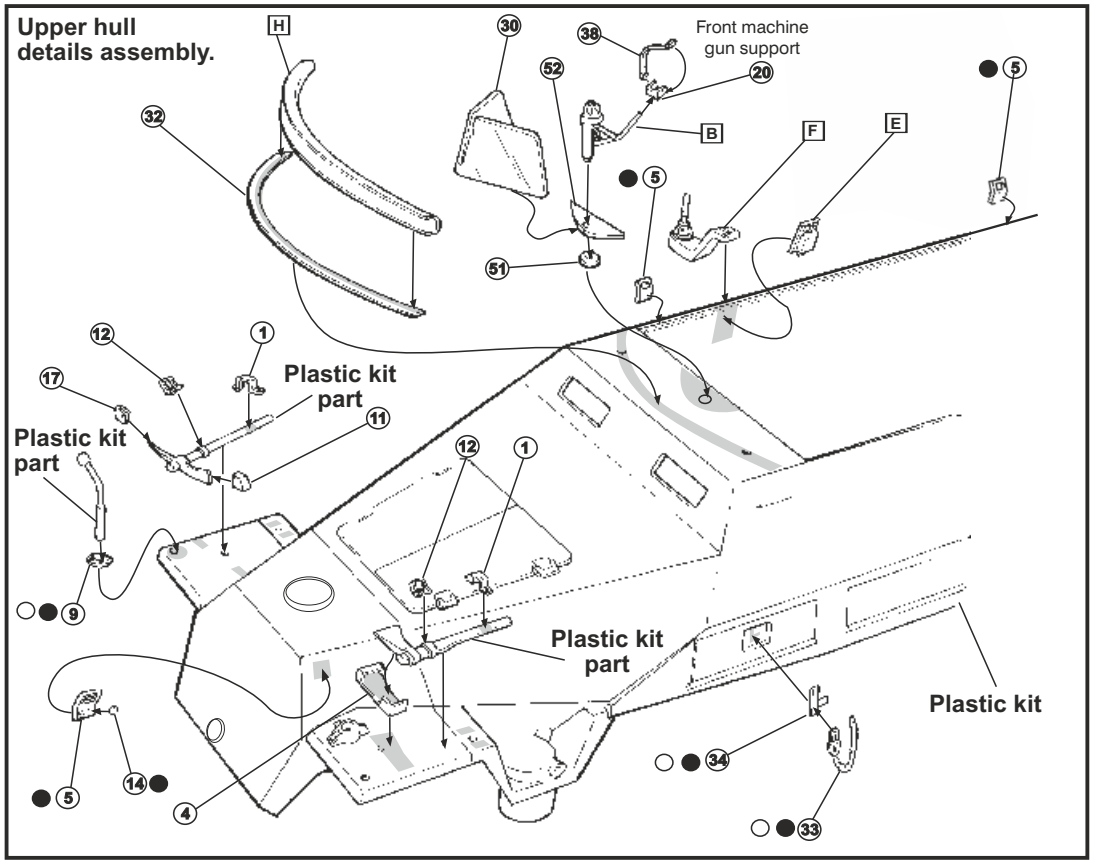

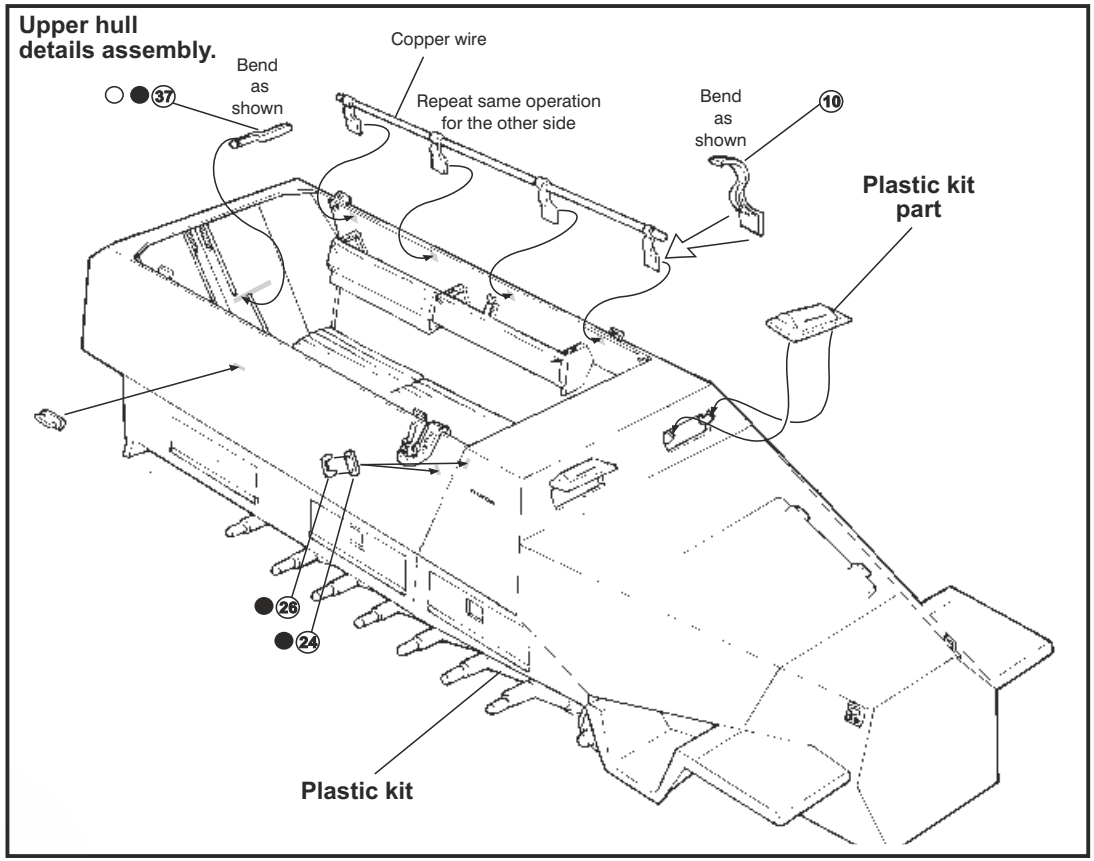

ALSO AVAILABLE:



Farm ruin NO.006

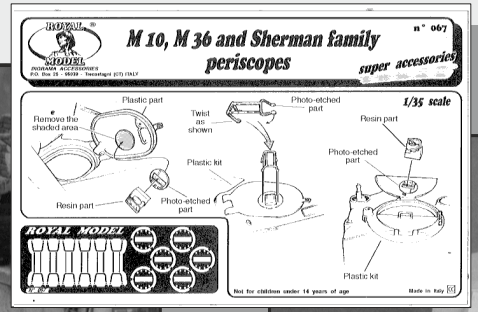

NO.067

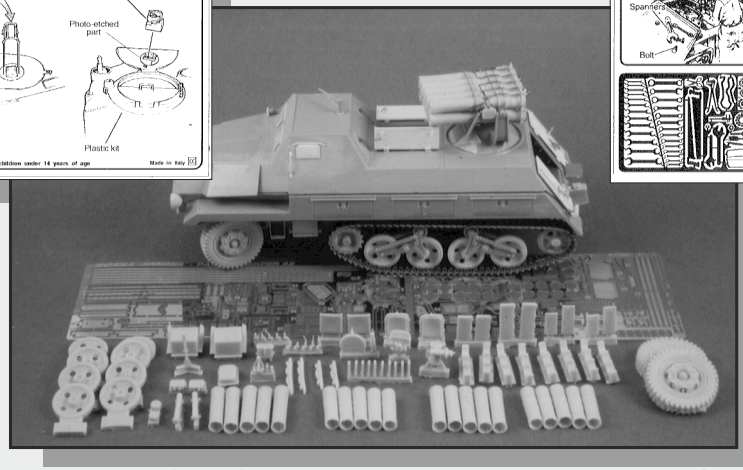

Panzerwerfer auf 42 maultier NO.074



NO.039

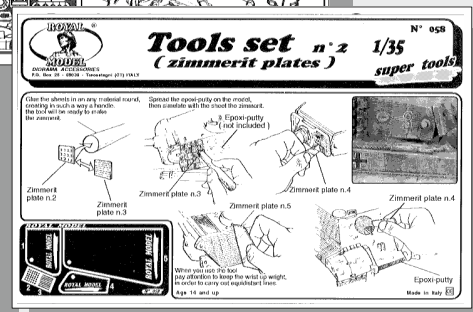

NO.058