DIORAMA ACCESSORIES
Royal Model by Reale Roberto
P.O. Box 25 - 95039 - Trecastagni (CT) ITALY

MICRODETAILS SET
No. 272
1/35 Scale

RSO type 01

The parts included in this kit are to be assembled in conjunction with the ITALERI kit no. 227. For best results in the assembling of photo-etched and resin parts use cyanoacrylate glue. Always remember to use cyanoacrylate glue in a well ventilated area. Before assembling be sure to remove all parts to be substituted with photo-etched and resin parts. It is advised before assembling to study well the instructions which accompany this MICRODETAILS SET plus any other sufficient documentation. Note that some particulars illustrated in the instructions have been enlarged for easy

If ulterior details are required for your model it is possible to use added set ROYAL MODEL no. 275 RSO stowage

○ Substitute the plastic part with the photo-etched or resin part ● Repeat same operation for the other side R Resin part ◇ Facultative

1 Cabin interior details assembly.

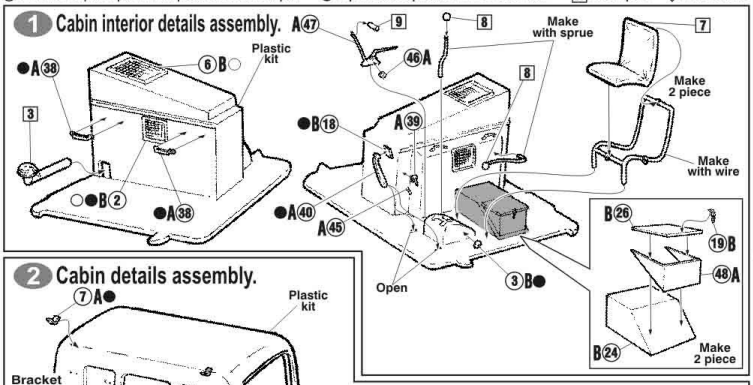

2 Cabin details assembly.

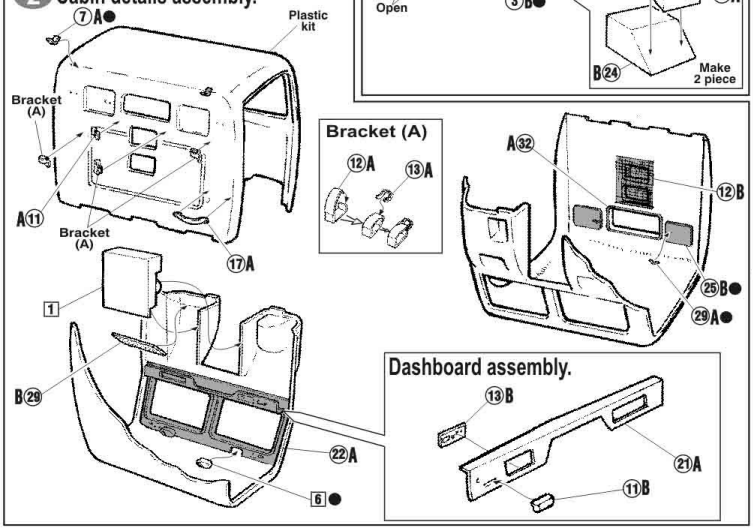

3 Cabin details assembly.

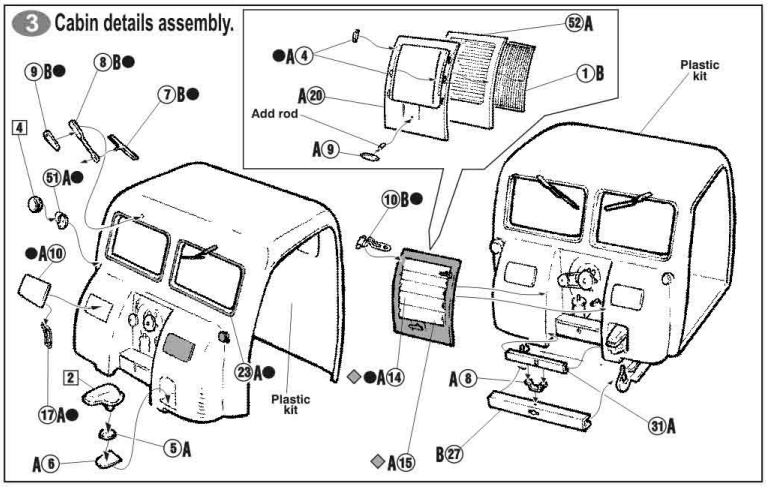

4 Details assembly.

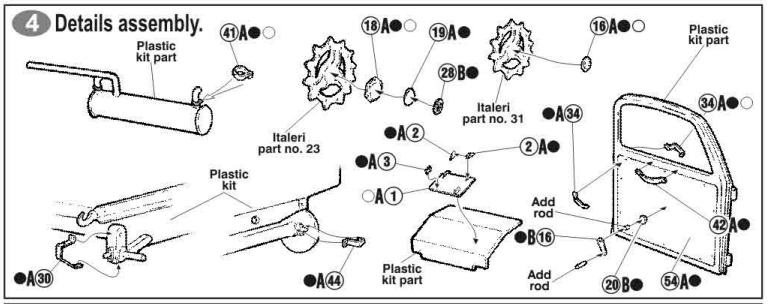

5 Cargo deck details assembly.

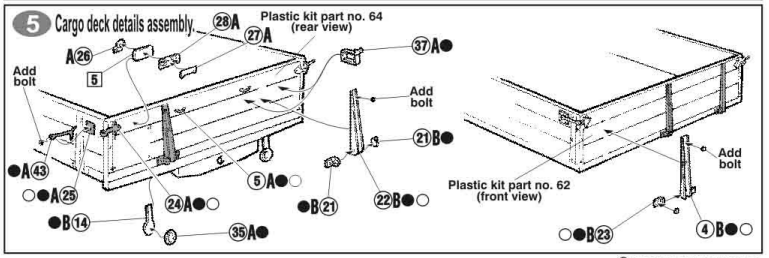

©(2002)ROYAL MODEL