ROYAL MODEL
DIORAMA ACCESSORIES
Royal Model by Reale Roberto,
Via Federico De Roberto ,65- 95039-Trecastagni (CT) ITALY

M60 A1/A3

1/35

microdetails set

(RESIN PARTS IDENTIFICATION)

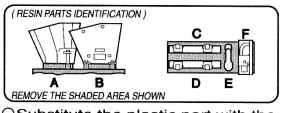

REMOVE THE SHADED AREA SHOWN

○ Substitute the plastic part with the photo-etched part.

● Repeat same operation for the other side.

The parts included in this kit are to be assembled in conjunction with the Tamiya kit.
For best results in the assembling of photo-etched and resin parts use cyanoacrylate glue.
Always remember to use cyanoacrylate glue in a well ventilated area.
Before assembly be sure to remove all parts to be substituted with photo-etched and resin parts.
It is advised before assembly to study well the instructions which accompany this MICRODETAILS SET plus any other sufficient documentation.
Note that some particulars illustrated in the instructions have been enlarged for easy identification.

Upper hull details assembly

Repeat same operation for the other side

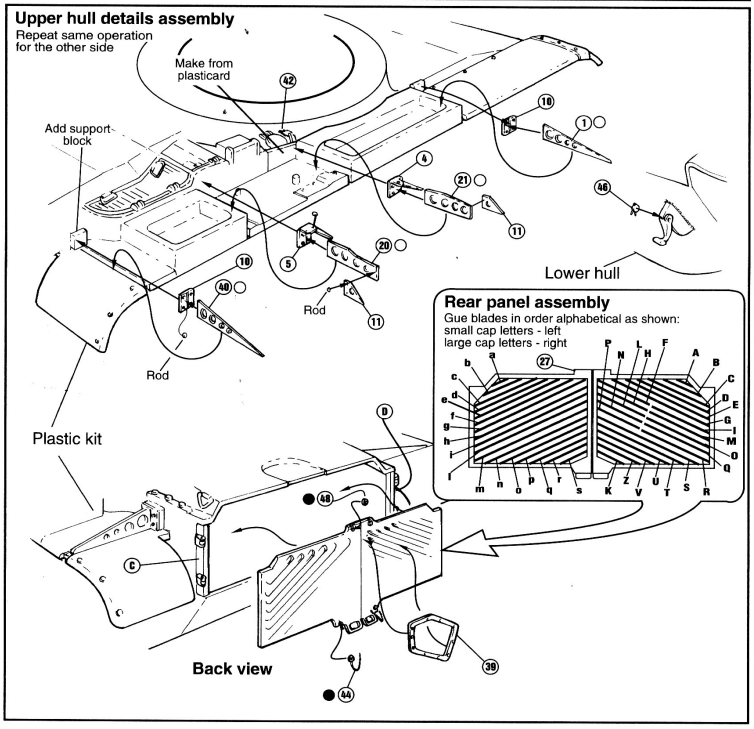

Rear panel assembly

Gue blades in order alphabetical as shown:
small cap letters - left
large cap letters - right

Turret details assembly

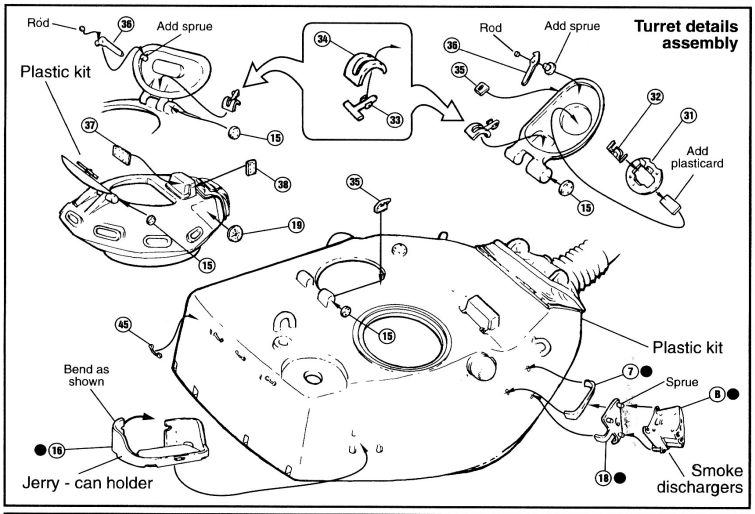

C - 2296/VRC Intercom box assembly

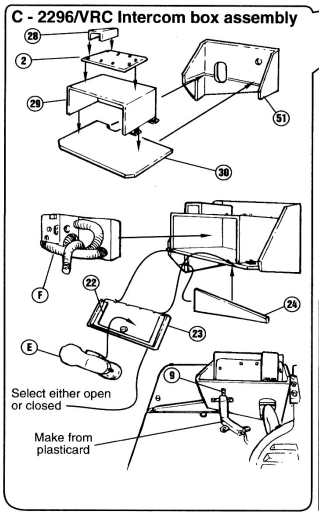

For correct position of handles refer to original kit

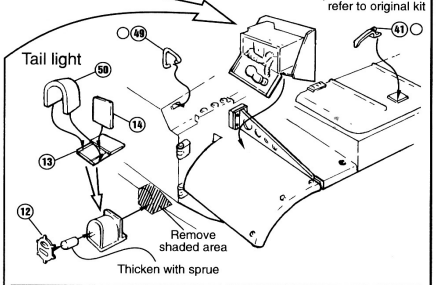

Air cleaner assembly

Repeat same operation for the second piece

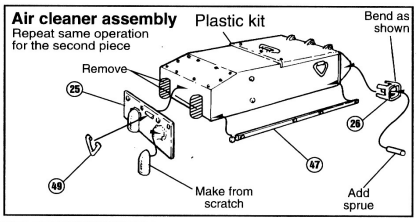

Drawings by **ROYAL MODEL** (1993)