ROYAL MODEL
DIORAMA ACCESSORIES
Royal Model by Reale Roberto
P.O. Box 25 - 95039 - Trecastagni (CT) ITALY

MICRODETAILS SET
No. 253
1/35 Scale

Sd. Kfz. 231 (6 rad) Armored Car

The parts included in this kit are to be assembled in conjunction with the **HISTORIC** kit no. 35 004. For best results in the assembling of photo-etched and resin parts use cyanoacrylate glue. Always remember to use cyanoacrylate glue in a well ventilated area. Before assembly be sure to remove all parts to be substituted with photo-etched and resin parts. It is advised before assembly to study well the instructions which accompany this **MICRODETAILS SET** plus any other sufficient documentation. Note that some particulars illustrated in the instructions have been enlarged for easy identification.
If ulterior details are required for your model it is possible to use added set ROYAL MODEL no. 265.

(00) Photo-etched part [R] Resin part ● Repeat same operation for the other side ○ Substitute the plastic part with the photo-etched or resin part

1 Turret details assembly.

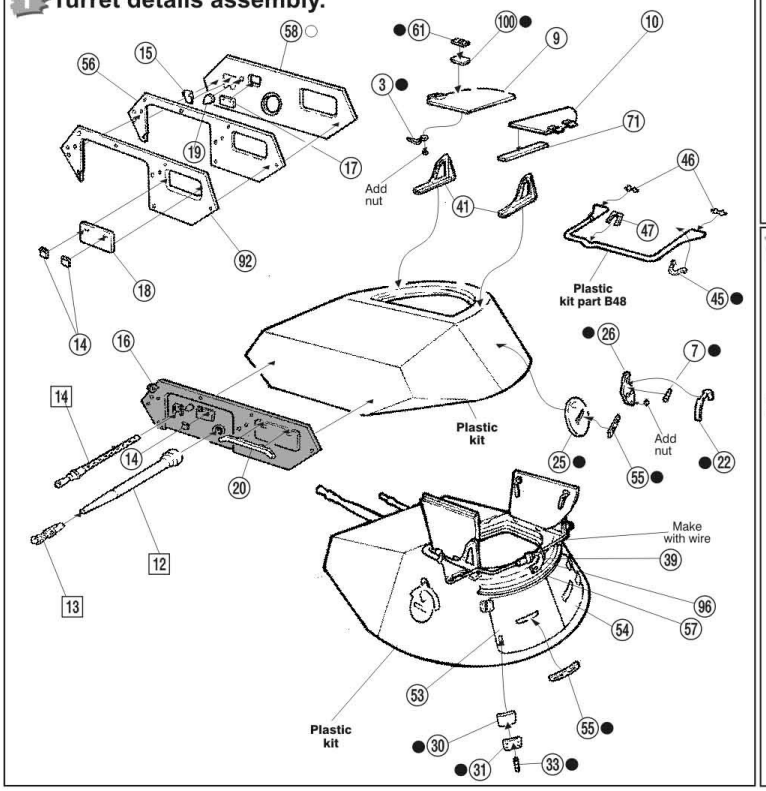

2 Hull details assembly.

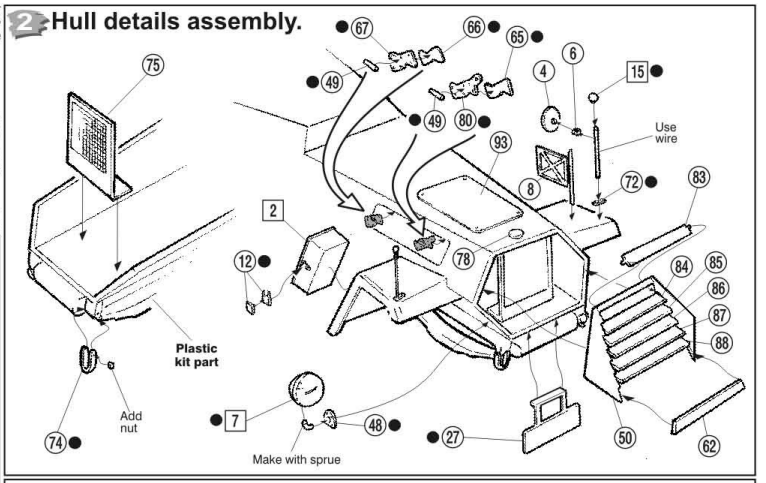

3 Hull details assembly.

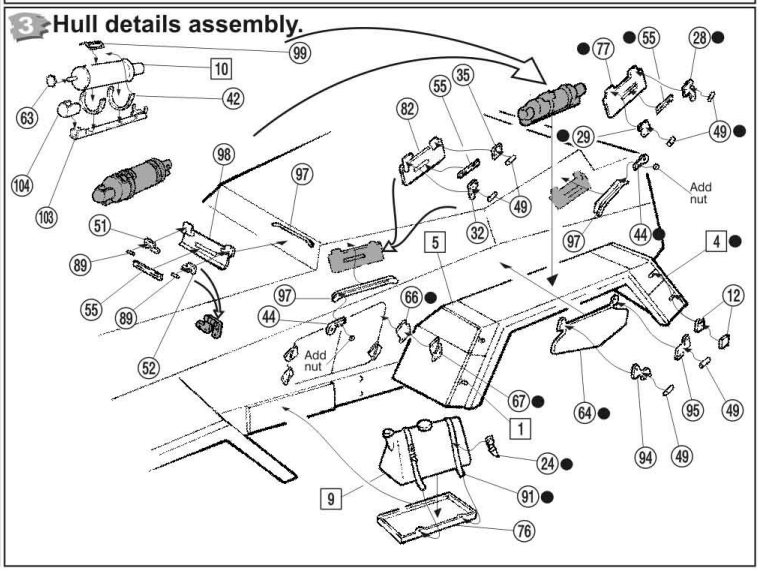

4 Hull details assembly.

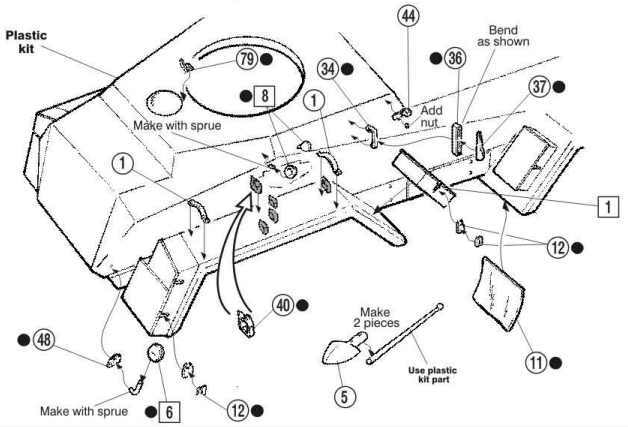

5 Rear hull details assembly.

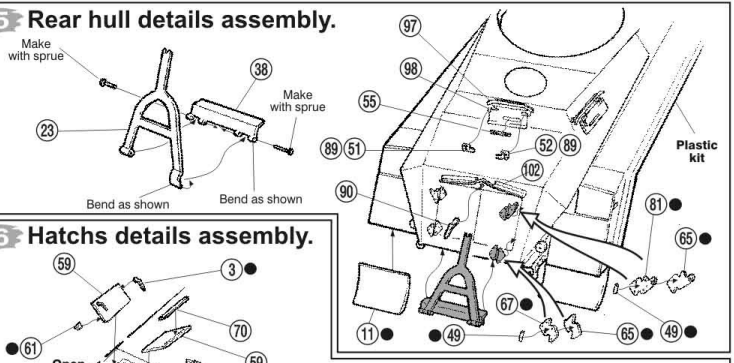

6 Hatchs details assembly.

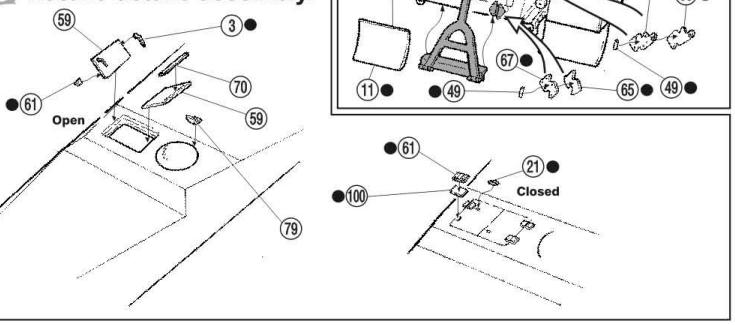

7 Hull details assembly.

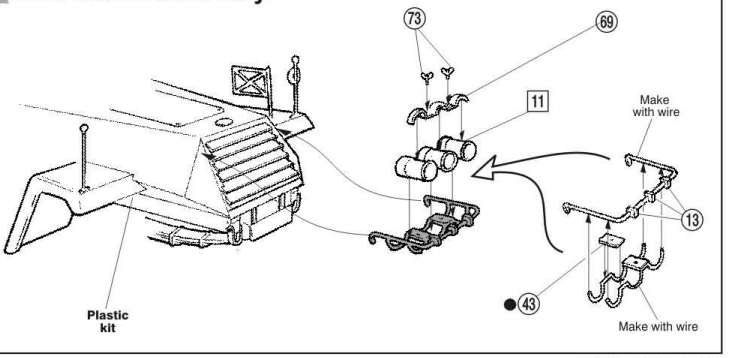

© (2001) ROYAL MODEL

Other sets available for this model.

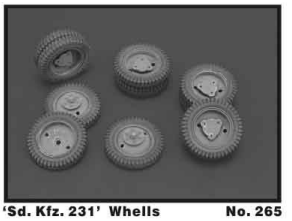

'Sd. Kfz. 231' Whells No. 265



German tanker No. 229



German tank equipment-WWII No. 206



Spray masking stencil No. 048

If you are interested to see all our range of products, visit our website: www.royalmodel.com