ROYAL MODEL
DIORAMA A CCESSORIES
Royal Model by Reale Roberto
RO. Box 25 • 95039 • Trecastagni (CT) ITALY

MICRODETAILS SET
No. 240
1/35 Scale

Sd.Kfz. 251/1 Ausf D part 2°

The parts included in this kit are to be assembled in conjunction with the **Tamiya** kit and **ROYAL MODEL** Set n. 086. For best results in the assembling of photo-etched and resin parts use cyanoacrylate glue. Always remember to use cyanoacrylate glue in a well ventilated area. Before assembly be sure to remove all parts to be substituted with photo-etched and resin parts. It is advised before assembly to study well the instructions which accompany this MICRODETAILS SET plus any other sufficient documentation. Note that some particulars illustrated in the instructions have been enlarged for easy identification.

○ Substitute the plastic part with the photo-etched or resin part R Resin part (00) Photo-etched part (00) Film ● Repeat same operation for the other side

1 Details assembly.

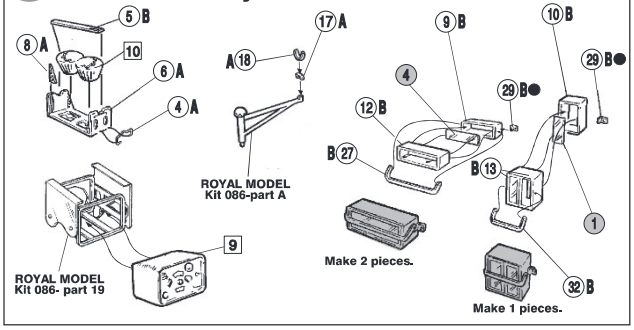

2 Hull details assembly.

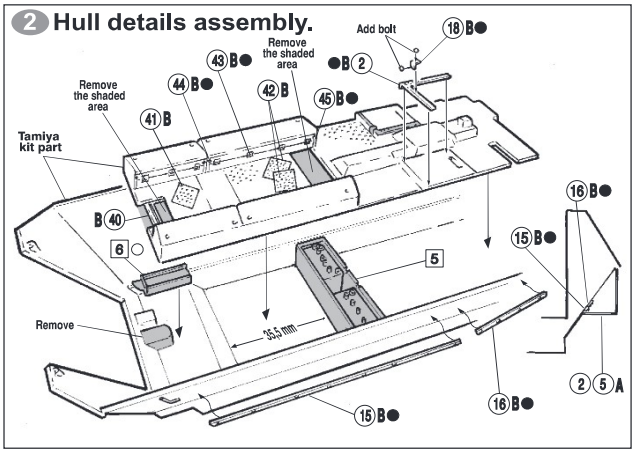

3 Meter panel assembly.

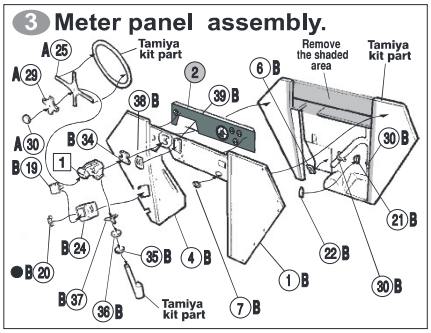

4 Interior details assembly.

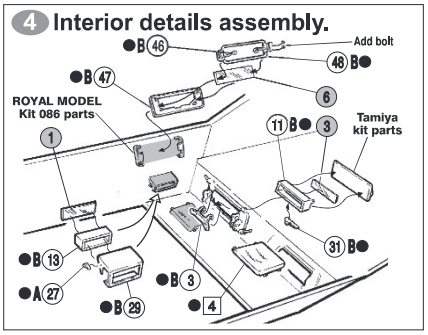

5 Hull details assembly.

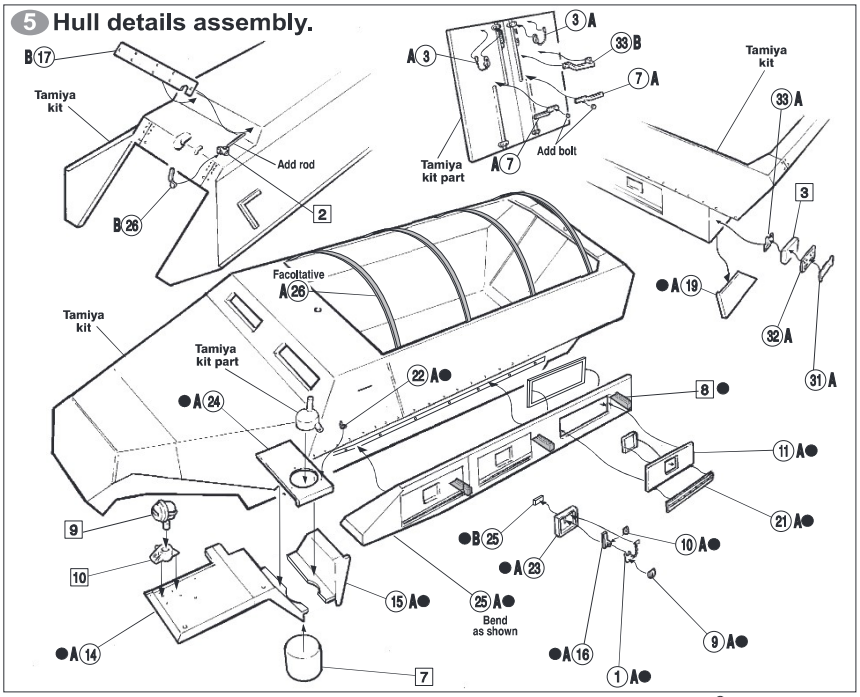

©(2001) ROYAL MODEL