MICRODETAILS SET
No. 224
1/35 Scale

Sd. Kfz. 250/8 "NEU"
7,5 cm KwK37 (L/24) "STUMMEL"

The parts included in this kit are to be assembled in conjunction with the **DRAGON** kit **No 6102**. For best results in the assembling of photo-etched and resin parts use cyanoacrylate glue. Always remember to use cyanoacrylate glue in a well ventilated area. Before assembly be sure to remove all parts to be substituted with photo-etched and resin parts. It is advised before assembly to study well the instructions which accompany this **MICRODETAILS SET** plus any other sufficient documentation. Note that some particulars illustrated in the instructions have been enlarged for easy identification.

○ Substitute the plastic part with the photo-etched or resin part	(00) Photo-etched part
● Repeat same operation for the other side	[R] Resin part

If ulterior details are required for your model it is possible to use added set **ROYAL MODEL no. 220-222.**

1 Details assembly.

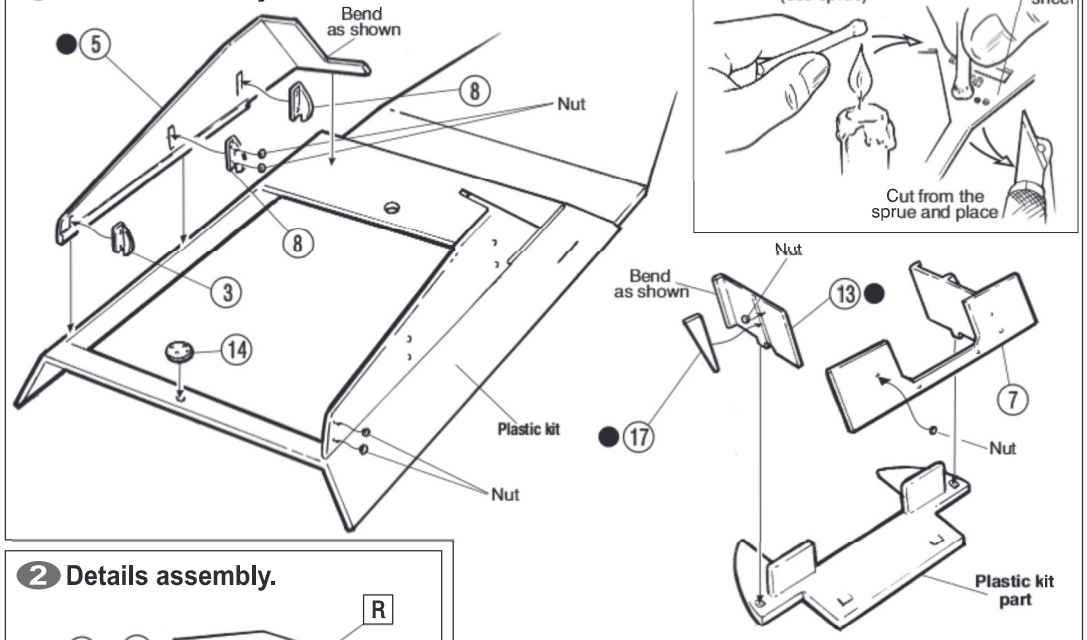

2 Details assembly.

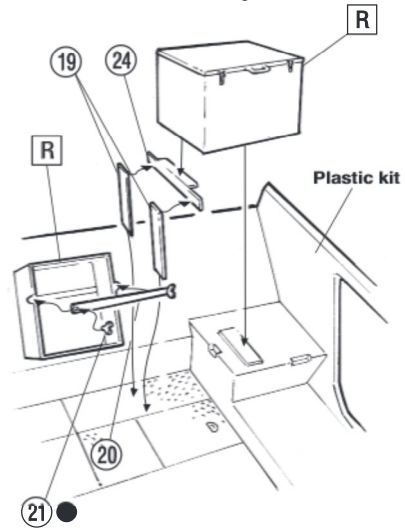

3 Details assembly.

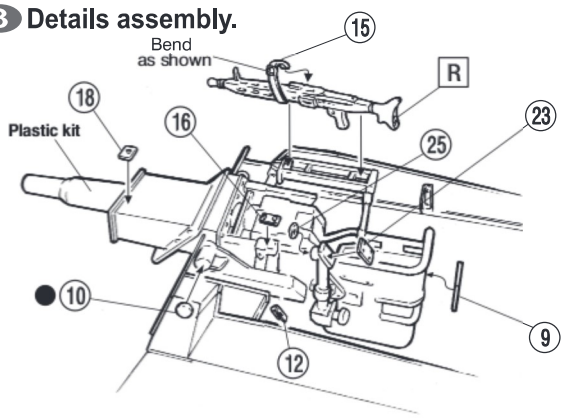

© (2000) ROYAL MODEL