ROYAL MODEL
DIORAMA ACCESSORIES

MICRODETAILS SET

Sd. Kfz. 250/1 "NEU"
2cm Reconnaissance

No. 223
1/35 Scale

The parts included in this kit are to be assembled in conjunction with the **DRAGON** kit **No 6106.** For best results in the assembling of photo-etched and resin parts use cyanoacrylate glue. Always remember to use cyanoacrylate glue in a well ventilated area. Before assembly be sure to remove all parts to be substituted with photo-etched and resin parts. It is advised before assembly to study well the instructions which accompany this **MICRODETAILS SET** plus any other sufficient documentation. Note that some particulars illustrated in the instructions have been enlarged for easy identification. Also note that some photo-etched details will be easier to work with if heated with flame before mounting.

- ○ Substitute the plastic part with the photo-etched or resin part
- ● Repeat same operation for the other side
- ⓪ Photo-etched part (A)
- ⓪ Photo-etched part (B)
- Ⓡ Resin part
- ✹ To be heated

RESIN PARTS (remove the shaded area)



WIRE 0,30mm Ø

1 Details assembly.

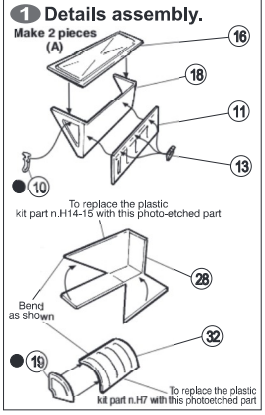

2 Details assembly.

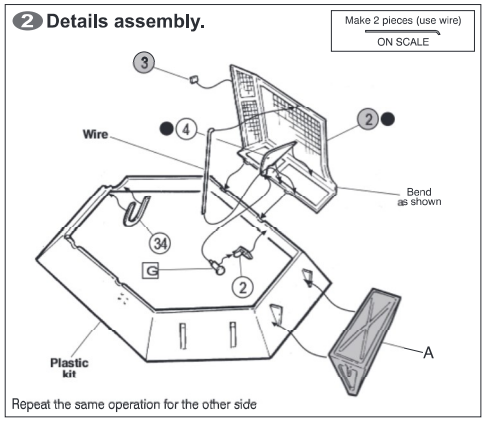

Repeat the same operation for the other side

3 Details assembly.

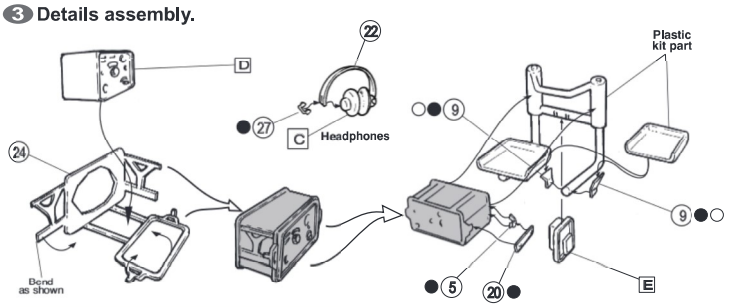

4 Details assembly.

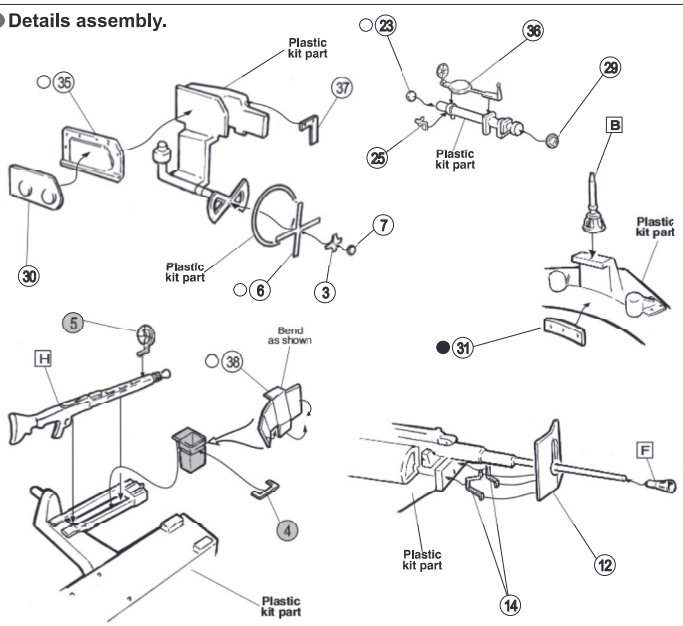

5 Details assembly.

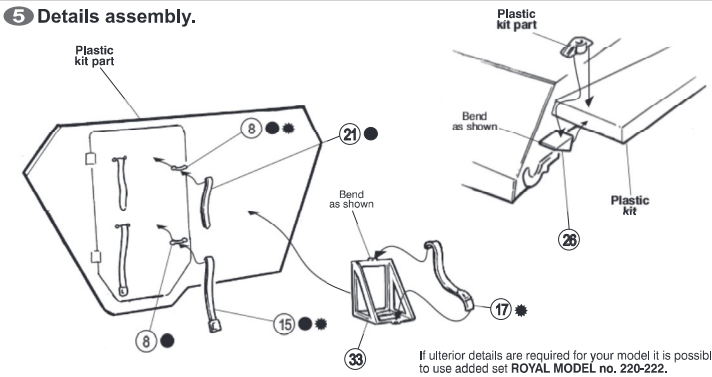

If ulterior details are required for your model it is possible to use added set **ROYAL MODEL no. 220-222.**

© (2000) ROYAL MODEL