ROYAL MODEL
DIORAMA ACCESSORIES

MICRODETAILS SET

Sd. Kfz. 250/1 "NEU" part 2

No. 222
1/35 Scale

The parts included in this kit are to be assembled in conjunction with the **DRAGON** kit **No 6100**. For best results in the assembling of photo-etched and resin parts use cyanoacrylate glue. Always remember to use cyanoacrylate glue in a well ventilated area. Before assembly be sure to remove all parts to be substituted with photo-etched and resin parts. It is advised before assembly to study well the instructions which accompany this **MICRODETAILS SET** plus any other sufficient documentation. Note that some particulars illustrated in the instructions have been enlarged for easy identification. Also note that some photo-etched details will be easier to work with if heated with flame before mounting.

● Repeat same operation for the other side	R Resin part
(00) Photo-etched part	✸ To be heated

1 Details assembly.

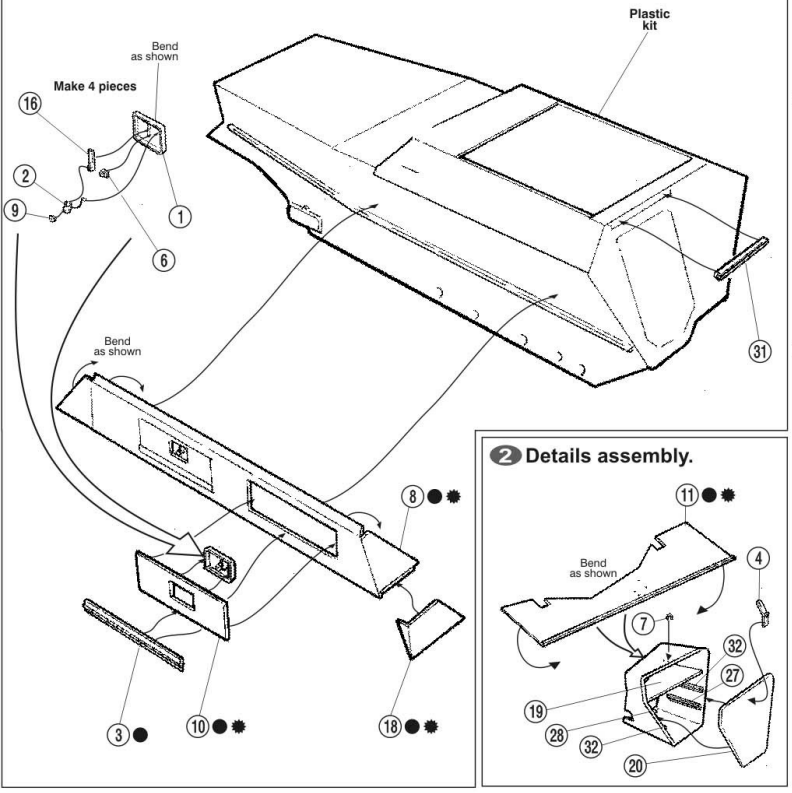

2 Details assembly.

3 Details assembly.

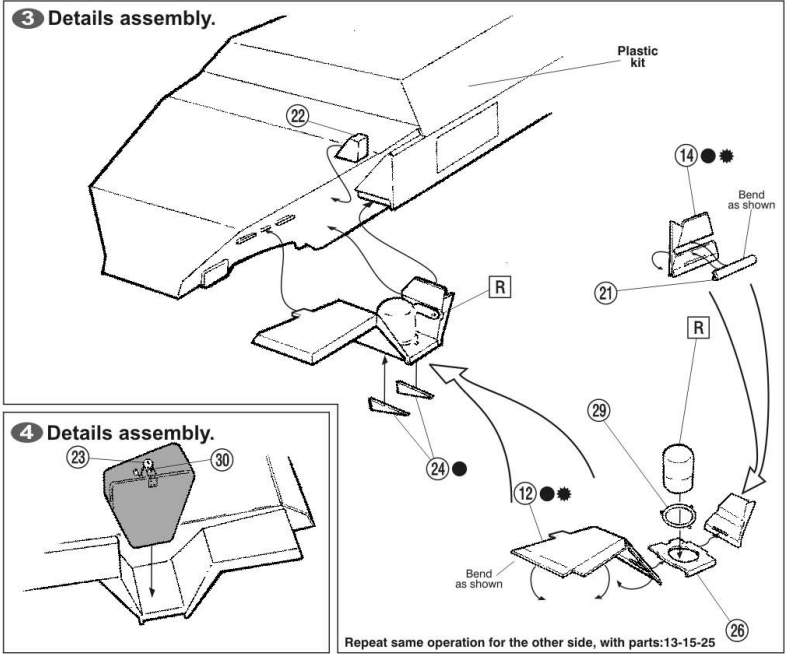

Repeat same operation for the other side, with parts:13-15-25

4 Details assembly.

Other MICRODETAILS SET available for your kit.









For see all range of our products, visit our web site.
www:royalmodel.com.

© (2000) ROYAL MODEL