ROYAL MODEL
DIORAMA ACCESSORIES
Royal Model by Reale Roberto
P.O. Box 29 - 95039 - Trecastagni (CT) ITALY

MICRODETAILS SET
No. 024
1/35 Scale

M 109 A2

This kit is to be assembled in conjunction with ITALERI kit n° 239. For best results in the assembling of photo-etched parts use cyanoacrylate glue .

● Repeat same for the other side
○ Substitute the plastic kit part with the photo-etched

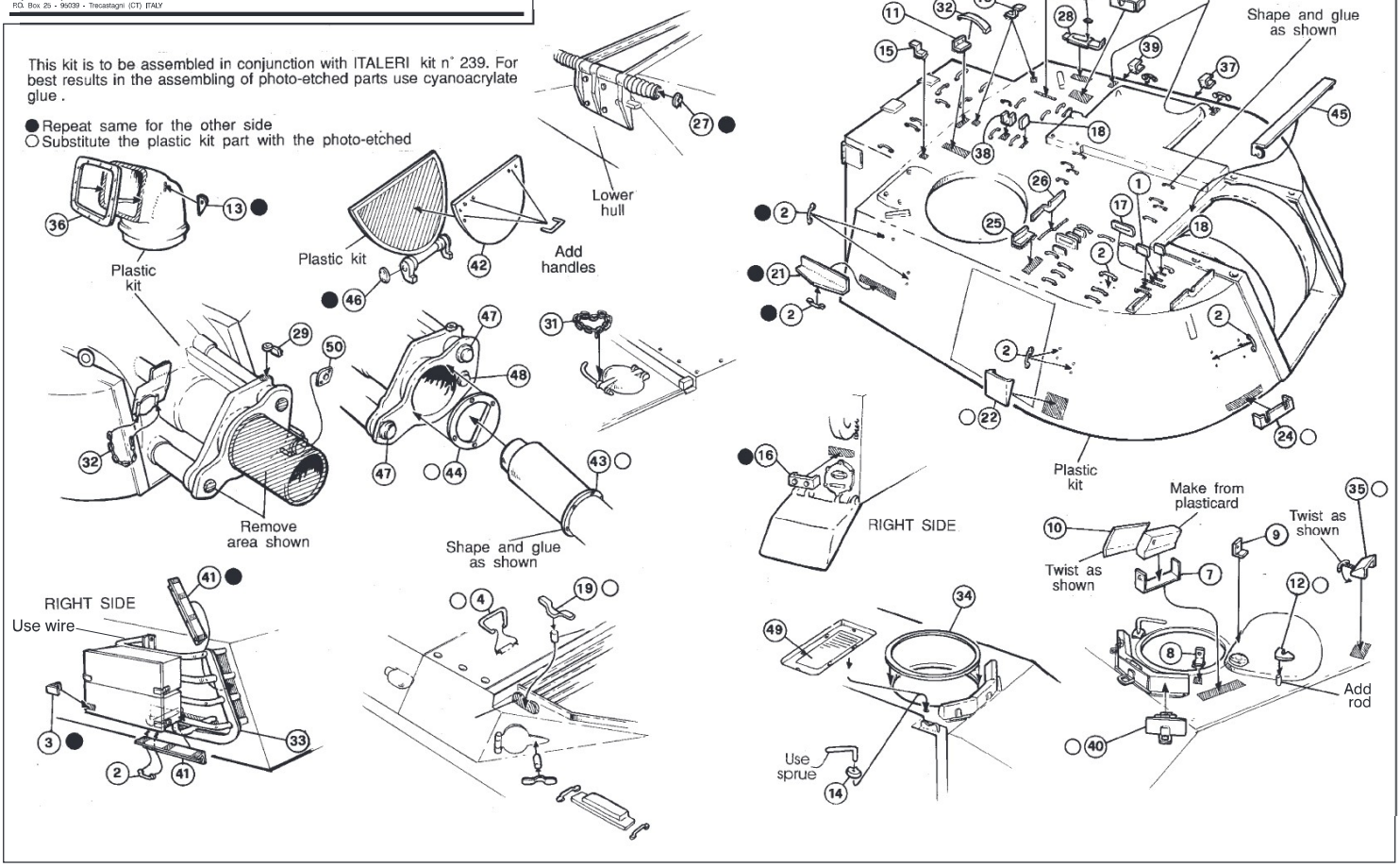

©(1993) ROYAL MODEL