ROYAL MODEL
DIORAMA ACCESSORIES
Royal Model by Reale Roberto
P.O. Box 25 - 95039 - Tracastagni (CT) ITALY

MICRODETAILS SET
No. 204
1/35 Scale

M40 75/18 Italian medium tank



The parts included in this kit are to be assembled in conjunction with the **ITALERI, TAMIYA** or **ZVEDA** kit. For best results in the assembling of photo-etched and resin parts use cyanoacrylate glue. Always remember to use cyanoacrylate glue in a well ventilated area. Before assembly be sure to remove all parts to be substituted with photo-etched and resin parts. It is advised before assembly to study well the instructions which accompany this MICRODETAILS SET plus any other sufficient documentation. Note that some particulars illustrated in the instructions have been enlarged for easy identification.

○ Substitute the plastic part with the photo-etched or resin part- ● Repeat same operation for the other side- (00) Photo-etched part (A)- (00) Photo-etched part (B)- [R] Resin part

1 Details assembly.

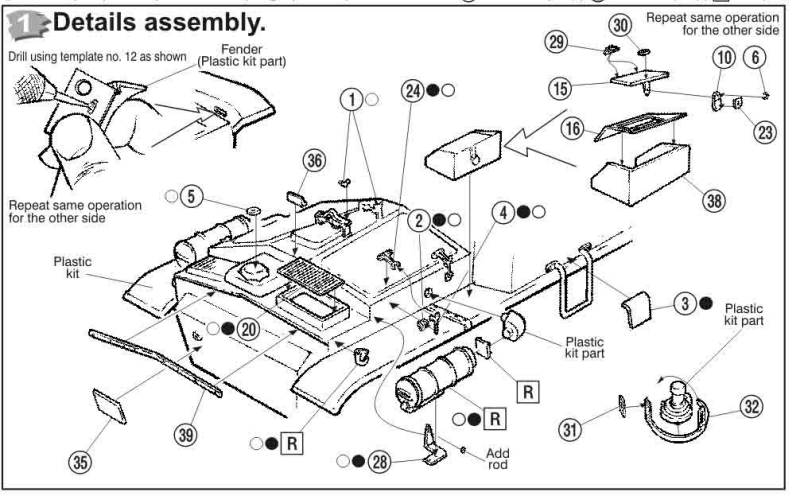

2 Details assembly.

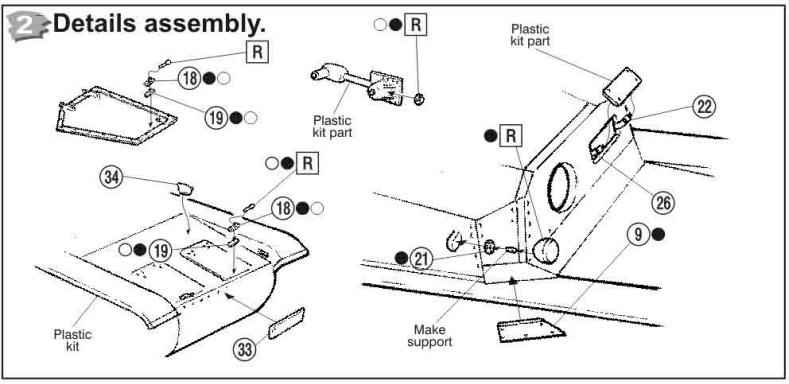

3 Turret interior details assembly.

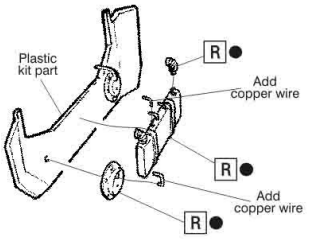

5 Paint whells.

Before painting the wheel frame colour the whole wheel black as shown

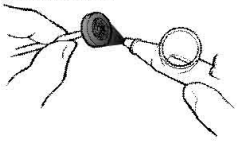

Hold template no. 11-13 still in position with finger tips and spray whell frame with paint of desidered colour as shown below

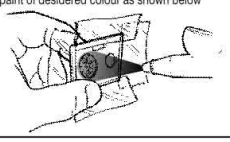

4 Turret interior details assembly.

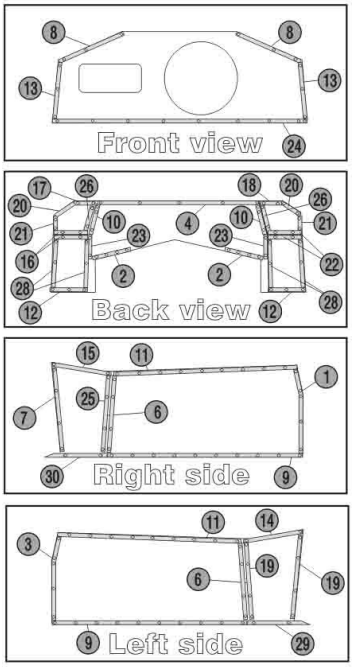

Also Available 1/35 Scale



Panzer III Ausf L (no. 167)



Workshop accessories (no. 039)



Italian NCO tanker (no. 192)



Italian tanker (no. 191)



Kubelwagen (no. 173)



Mudguards Panzer III-Stug III (no. 167)

© (1999) ROYAL MODEL