ROYAL MODEL
DIORAMA ACCESSORIES
Royal Model by Reale Roberto
P.O. Box 25 - 95039 - Trecastagni (CT) ITALY

MICRODETAILS SET
No. 201
1/35 Scale

STEYR TYPE 1500A/01



The parts included in this kit are to be assembled in conjunction with the TAMIYA kit no. 225. For best results in the assembling of photo-etched and resin parts use cyanoacrylate glue. Always remember to use cyanoacrylate glue in a well ventilated area. Before assembly be sure to remove all parts to be substituted with photo-etched and resin parts. It is advised before assembly to study well the instructions which accompany this MICRODETAILS SET plus any other sufficient documentation. Note that some particulars illustrated in the instructions have been enlarged for easy identification.

○ Substitute the plastic part with the photo-etched or resin part- ● Repeat same operation for the other side- (00) Photo-etched part (A)- (00) Photo-etched part (B)- [R] Resin part

1 Details assembly.

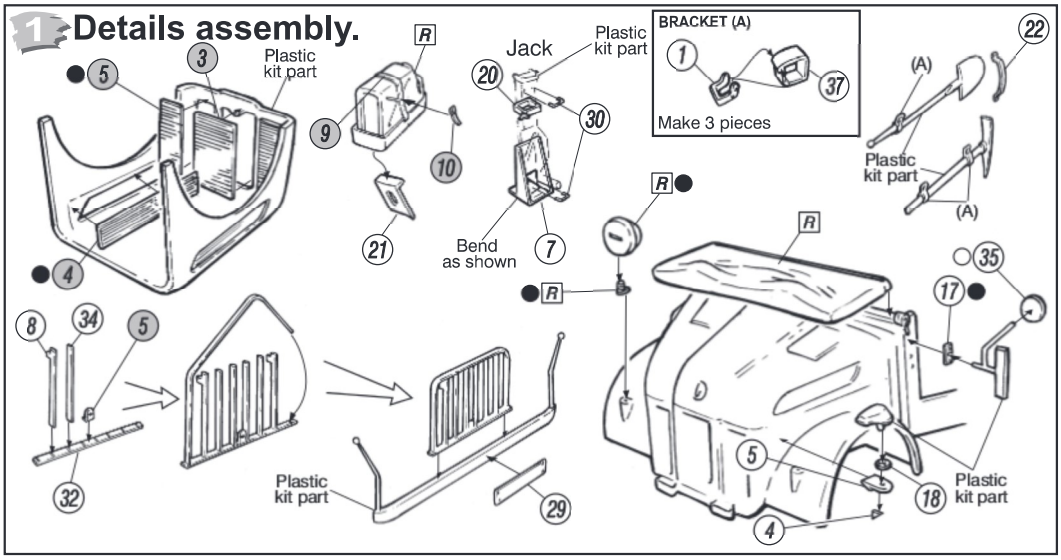

2 Details assembly.

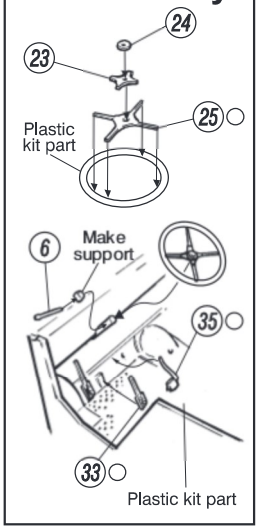

3 Details assembly.

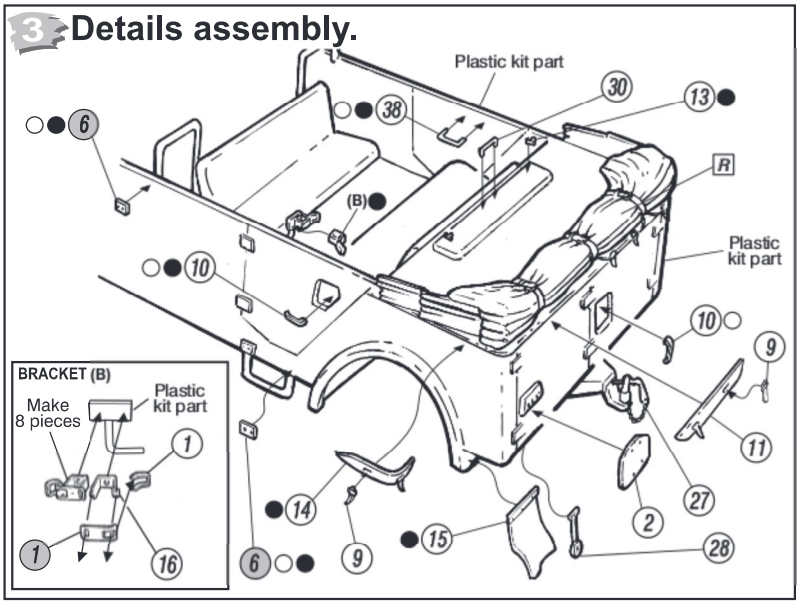

© (1999) ROYAL MODEL