ROYAL MODEL

DIORAMA ACCESSORIES

Royal Model by Reale Roberto
P.O. Box 25 - 95039 - Trecastagni (CT) ITALY

MICRODETAILS SET
No. 198
1/35 Scale

Sd.Kfz. 234/2 "PUMA"



The parts included in this kit are to be assembled in conjunction with the **ITALERI** kit no. 202. For best results in the assembling of photo-etched and resin parts use cyanoacrylate glue. Always remember to use cyanoacrylate glue in a well ventilated area. Before assembly be sure to remove all parts to be substituted with photo-etched and resin parts. It is advised before assembly to study well the instructions which accompany this MICRODETAILS SET plus any other sufficient documentation. Note that some particulars illustrated in the instructions have been enlarged for easy identification.

If ulterior details are required for your model it is possible to use added set ROYAL MODEL no. 207 "PUMA" wheels.

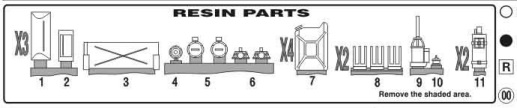

○ Substitute the plastic part with the photo-etched or resin part
● Repeat same operation for the other side
R Resin part
00 Photo-etched part

1 Turret details assembly.

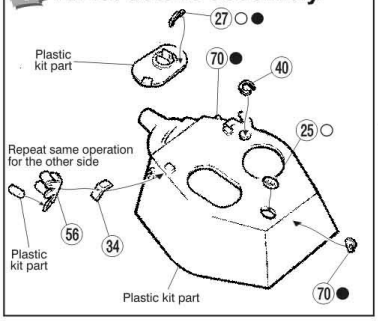

2 Stowage box assembly.

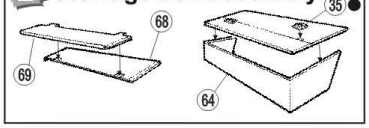

3 Hull modifications.

Repeat same operation for the other side.

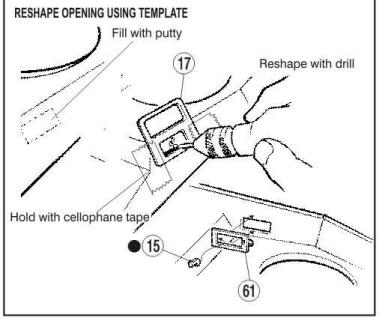

4 Hull details assembly.

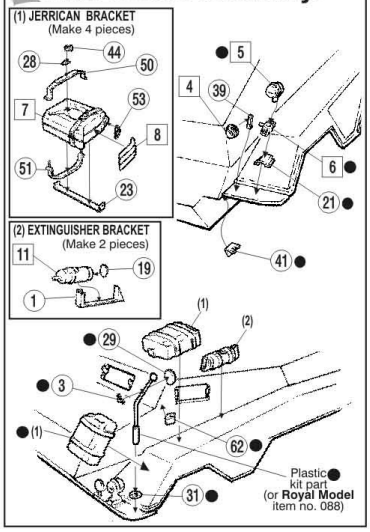

5 Hull details assembly.

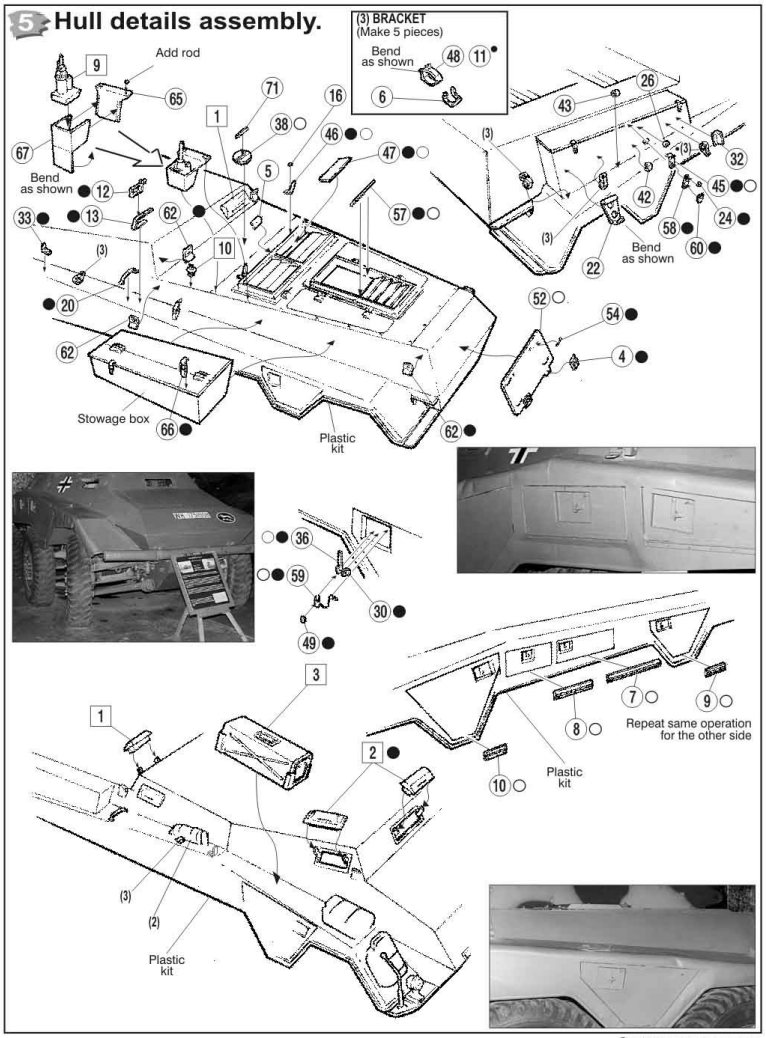

© (1999) ROYAL MODEL