ROYAL MODEL
DIORAMA ACCESSORIES
Royal Model by Reale Roberto
P.O. Box 25 - 95039 - Trecastagni (CT) ITALY

U.S. M8 GREYHOUND

MICRODETAILS SET
No. 197
1/35 Scale



The parts included in this kit are to be assembled in conjunction with the **TAMIYA** or **ITALERI** kit. For best results in the assembling of photo-etched and resin parts use cyanoacrylate glue. Always remember to use cyanoacrylate glue in a well ventilated area. Before assembly be sure to remove all parts to be substituted with photo-etched and resin parts. It is advised before assembly to study well the instructions which accompany this MICRODETAILS SET plus any other sufficient documentation. Note that some particulars illustrated in the instructions have been enlarged for easy identification.

If ulterior details are required for your model it is possible to use added set **ROYAL MODEL** no. 212.

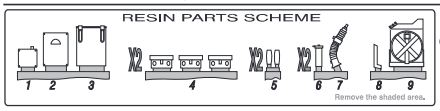

R Resin part
(00) Photo-etched part
○ Substitute the plastic part with the photo-etched or resin part
● Repeat same operation for the other side
◌ Facoltative

1 Turret details assembly.

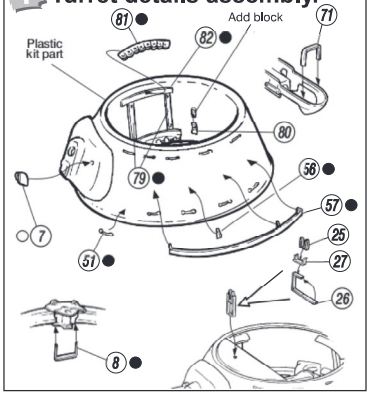

2 .50 Cal Machine Gun assembly.

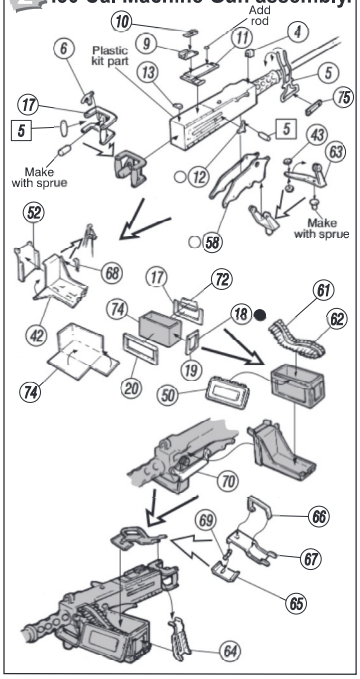

3 Interior details assembly.

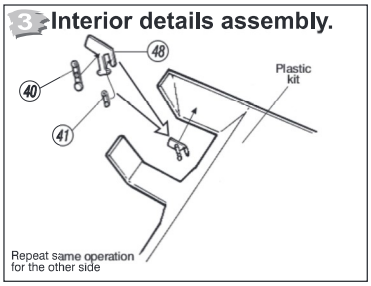

4 Interior details assembly.

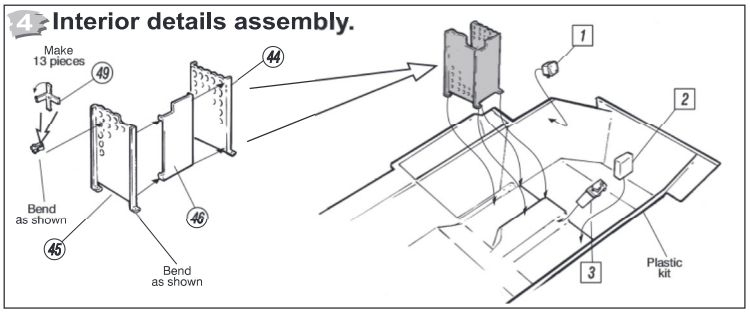

5 Hull details assembly.

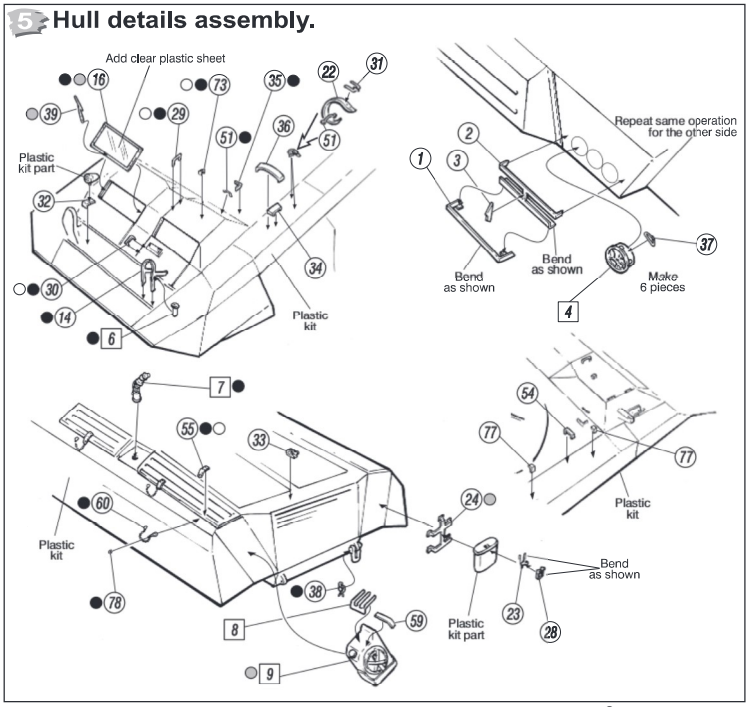

© (1999) ROYAL MODEL