ROYAL MODEL
DIORAMA ACCESSORIES
Royal Model by Reale Roberto
P.O. Box 25 • 95039 • Trecastagni (CT) ITALY

T34-85 Mod. 1944

part 2

MICRODETAILS SET
No. 187
1/35 Scale



The parts included in this kit are to be assembled in conjunction with the **DRAGON** kit no. 6066. For best results in the assembling of resin parts use cyanoacrylate glue. Always remember to use cyanoacrylate glue in a well ventilated area. Before assembly be sure to remove all parts to be substituted resin parts. It is advised before assembly to study well the instructions which accompany this MICRODETAILS SET plus any other sufficient documentation. Note that some particulars illustrated in the instructions have been enlarged for easy identification.
If ulterior details are required for your model it is possible to use added set ROYAL MODEL No. 185.

● Repeat same operation for the other side.

1 Interior panel assembly.

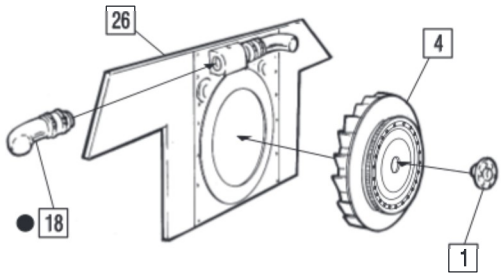

2 Engine assembly.

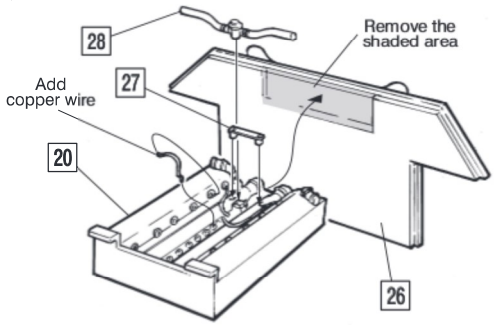

3 Transmission assembly.

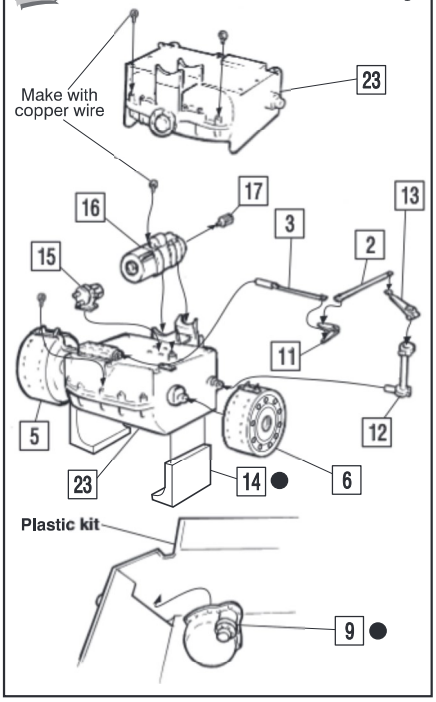

4 Transmission compartment assembly.

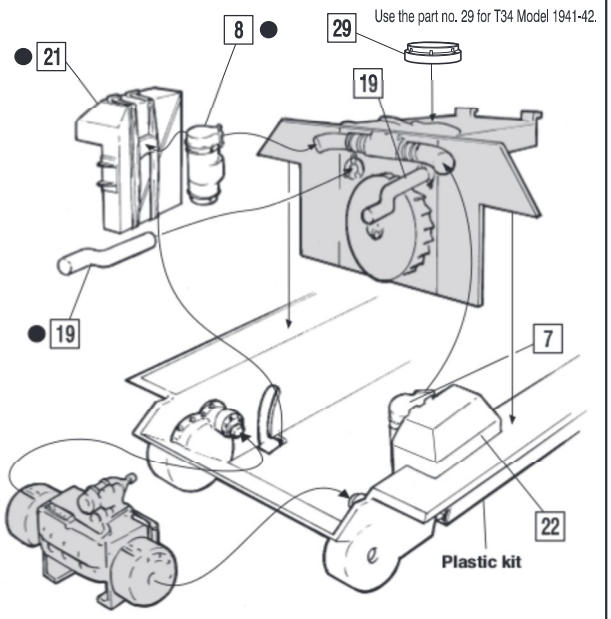

© (1998) ROYAL MODEL