ROYAL MODEL
DIORAMA ACCESSORIES
Royal Model by Roberto Reale
P.O Box 2 5 - 9 5039 - Trecastagni (CT) I TALY FAX + 39-95-7809911

NO. 140

Tiger I early version

microdetails set

RESIN PARTS IDENTIFICATION

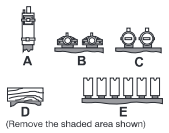

(Remove the shaded area shown)

The parts included in this kit are to be assembled in conjunction with the Academy kit.
For best results in the assembling of photo-etched and resin parts use cyanoacrylate glue.
Always remember to use cyanoacrylate glue in a well ventilated area.
Before assembly be sure to remove all parts to be substituted with photo-etched and resin parts.
It is advised before assembly to study well the instructions which accompany this MICRODETAILS SET plus any other sufficient documentation.
Note that some particulars illustrated in the instructions have been enlarged for easy identification.
If distortion occurs in some resin parts due to humidity immerge in hot water and reform.

00 Photo-etched part.
00 Resin part.
○ Substitute the plastic part with the photo-etched or resin part.
● Repeat same operation for the other side.

1 Turret details assembly.

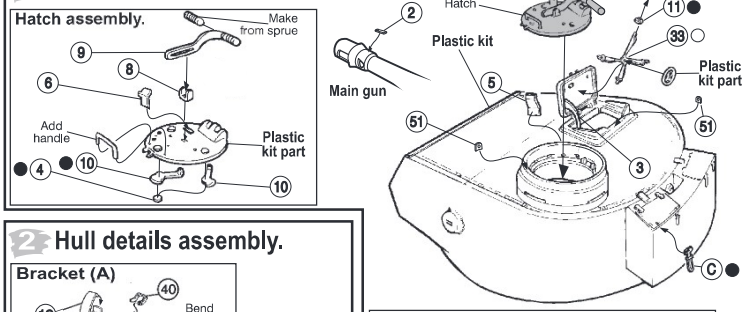

2 Hull details assembly.

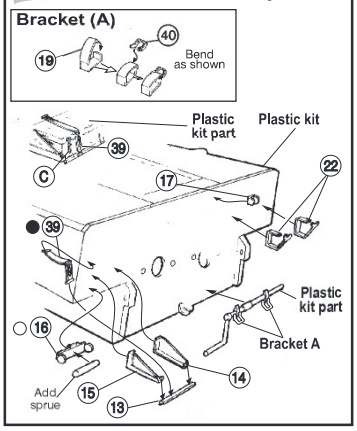

Smoke grenade ejectors assembly.

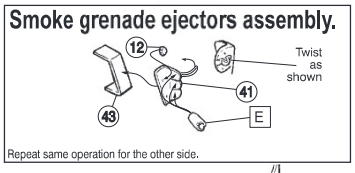

Repeat same operation for the other side.

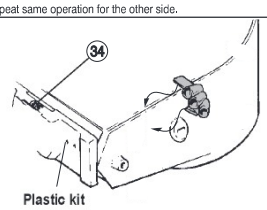

3 Hull details assembly.

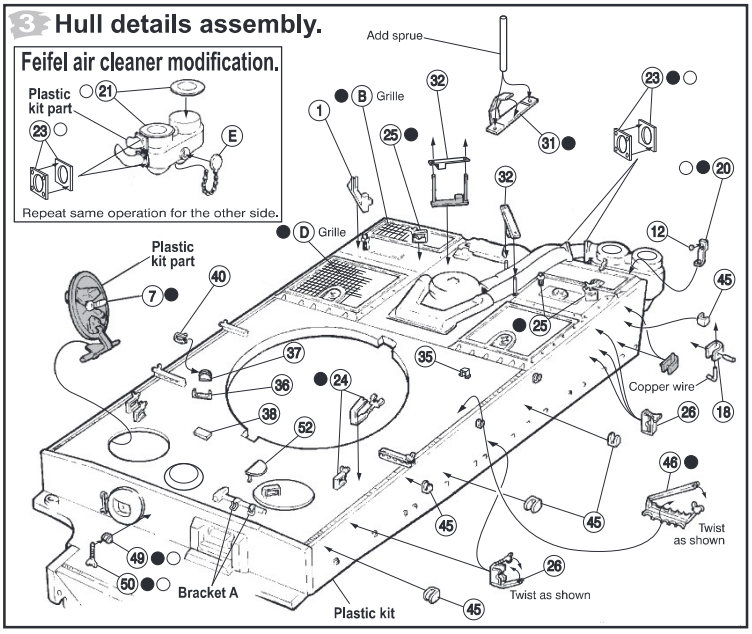

4 Hull details assembly.

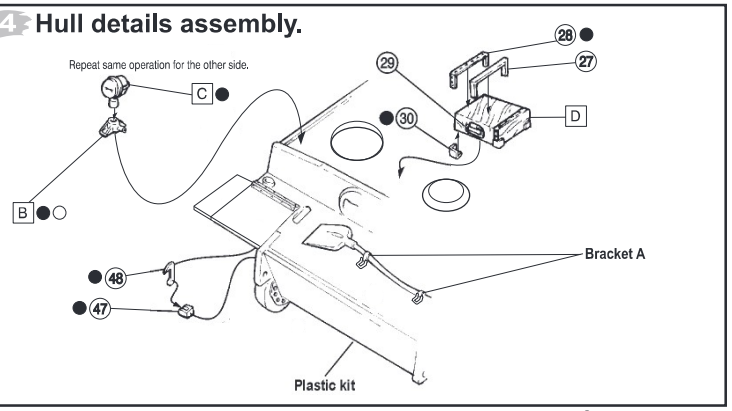

©(1997) ROYAL MODEL