ROYAL MODEL
DIORAMA ACCESSORIES
Royal Model by Roberto Reale
P.O Box 25 - 95039 - Trecastagni (CT) ITALY FAX +39-95-7809911

NO. 137

interior details

Le FH 18/2 Auf GW II (Sd. Kfz. 124) WESPE

microdetails set

For best results in the assembling of photo-etched and resin parts use cyanoacrylate glue.Always remember to use cyanoacrylate glue in a well ventilated area.Before assembly be sure to remove all parts to be substituted with photo-etched and resin parts.It is advised before assembly to study well the instructions which accompany this MICRODETAILS SET plus any other sufficient documentation.Note that some particulars illustrated in the instructions have been enlarged for easy identification.If distortion occurs in some resin parts due to humidity immerge in hot water and reform.

● Remove the plastic part to be substitute with the photo-etched part.
○ Resin part.
● Repeat same operation for the other side.
□ Photo-etched part.

1 Interior details assembly.

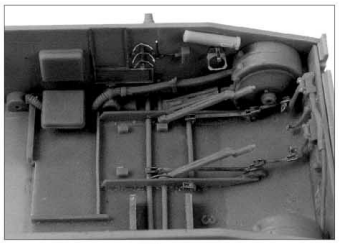

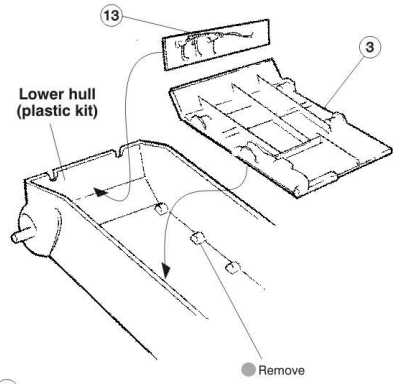

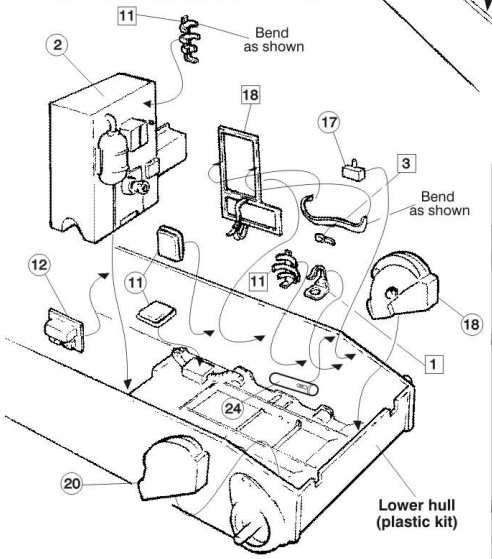

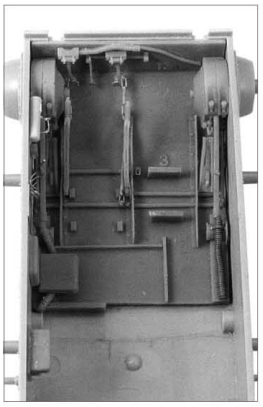

2 Interior details assembly.

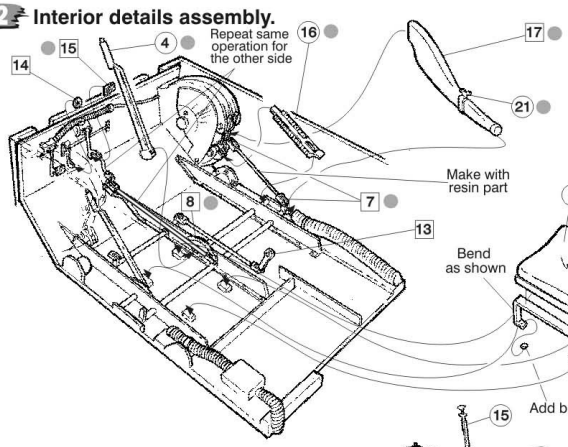

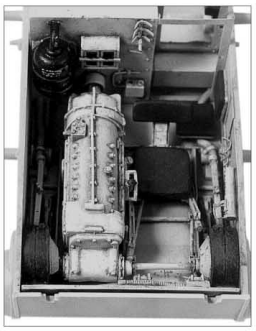

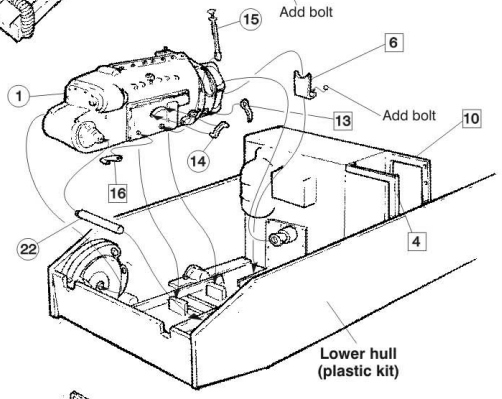

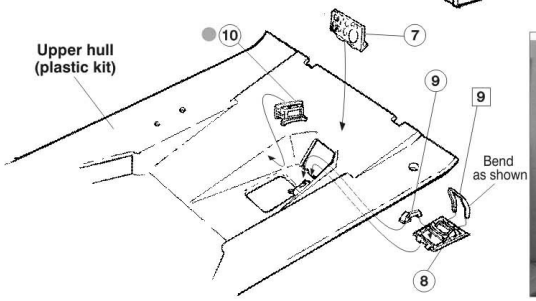

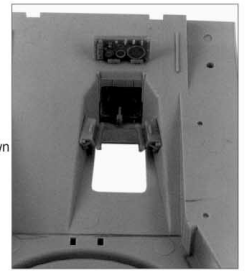

© (1997) ROYAL MODEL