ROYAL MODEL
DIORAMA ACCESSORIES
Royal Model by Reale Roberto,
Via Federico De Roberto, 65 - 95039 - Trecastagni (CT) ITALY

U.S. M1A1 ABRAMS

1/35

microdetails set

(RESIN PARTS IDENTIFICATION)

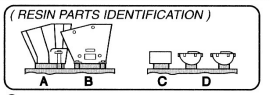

○ Substitute the plastic part with the photo-etched part.

● Repeat same operation for the other side.

The parts included in this kit are to be assembled in conjunction with Tamiya kit.
For best results in the assembling of photo-etched and resin parts use cyanoacrylate glue.
Always remember to use cyanoacrylate glue in a well ventilated area.
Before assembly be sure to remove all parts to be substituted with photo-etched and resin parts.
It is advised before assembly to study well the instructions which accompany this MICRODETAILS SET plus any other sufficient documentation.
Note that some particulars illustrated in the instructions have been enlarged for easy identification.

Make 4

Tool box assembly
Repeat same operation for the other side

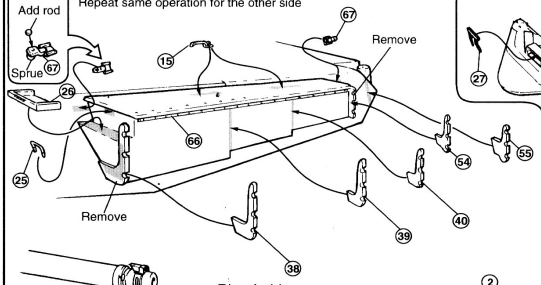

Hatch assembly

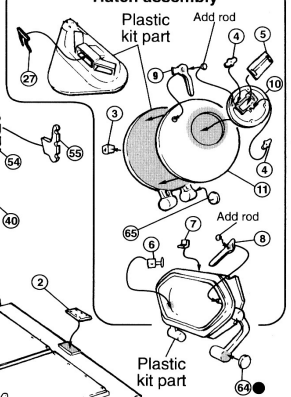

Main gun

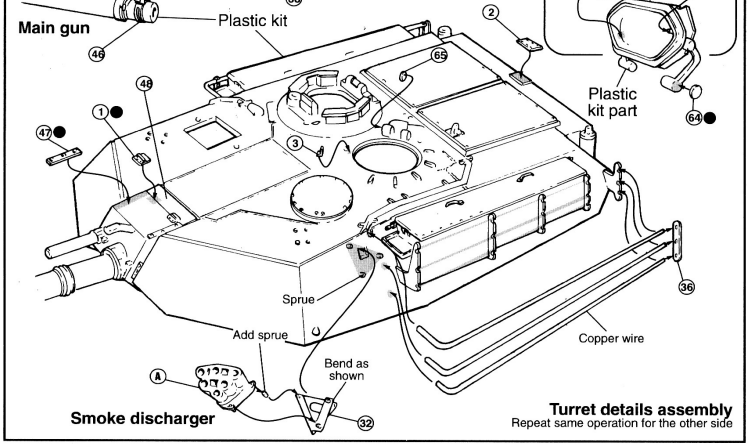

Smoke discharger

Turret details assembly
Repeat same operation for the other side

Rear turret details assembly

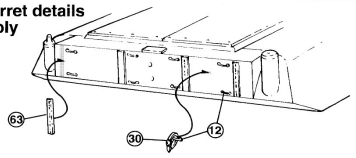

Bustle rack assembly

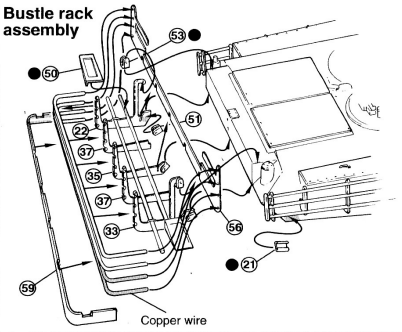

MACHINEGUNS

(50 Cal M2 MG)

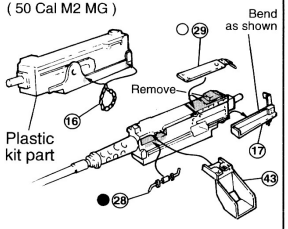

(7.62 mm M240 MG)

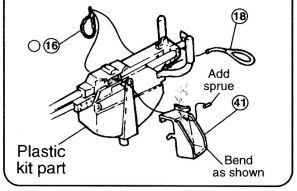

Upper hull details assembly
Repeat same operations for the other side

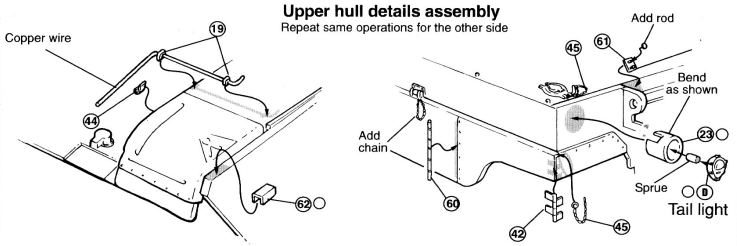

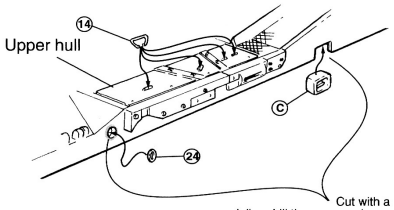

For mine plow version
Repeat same operation for the other side

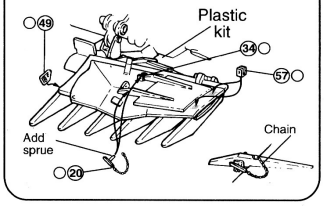

Drawings by **ROYAL MODEL** (1993)