ROYAL MODEL
DIORAMA ACCESSORIES

ITEM NO. 722

MICRODETAILS SET
1/35 Scale

Forklift

For best results in the assembling of photo-etched and resin parts use cyanoacrylate glue. Always remember to use cyanoacrylate glue in a well ventilated area. It is advisable before assembling to study well the instructions.

BE CAREFUL | REPEAT SAME OPERATION FOR THE OTHER SIDE | RESIN PART | PHOTO-ETCHED PART

Resin parts

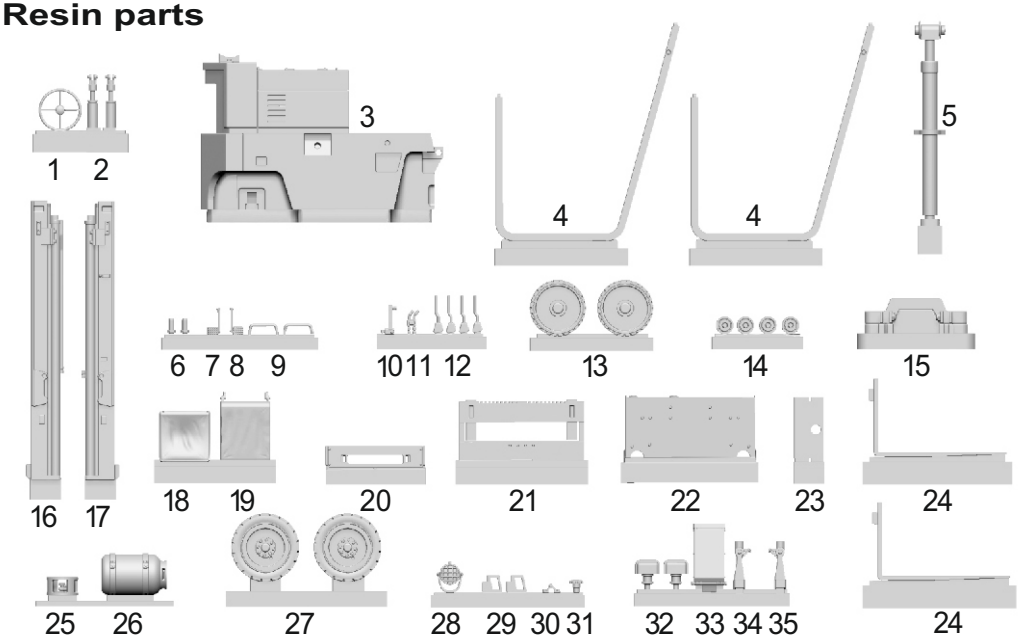

1

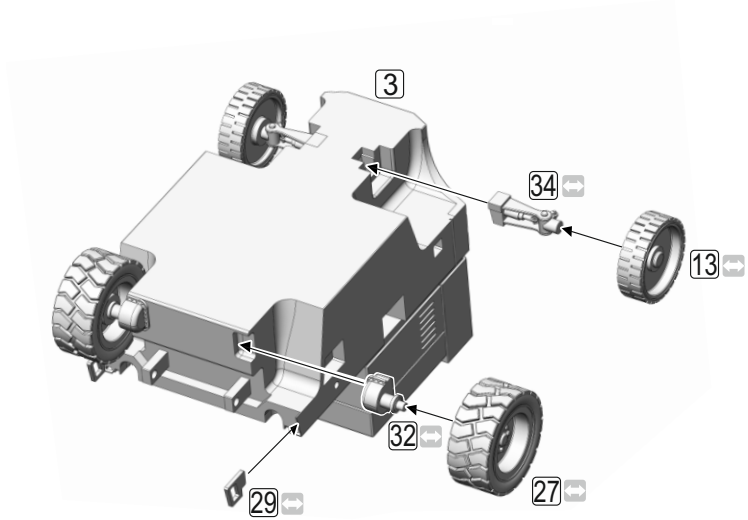

2

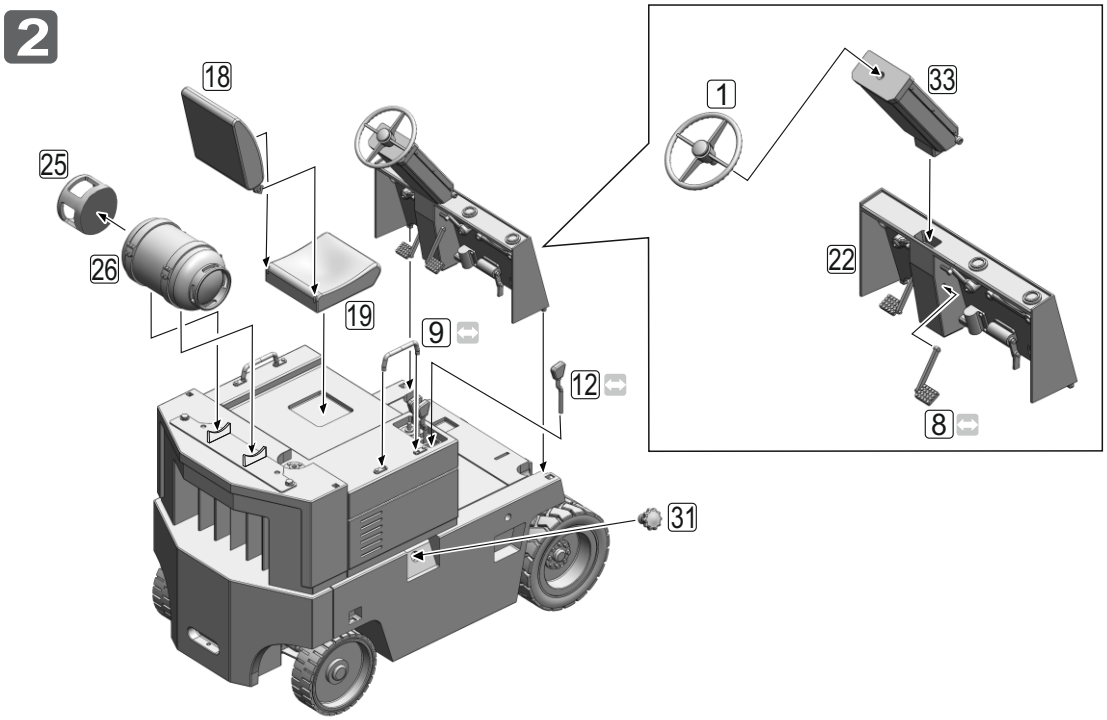

3

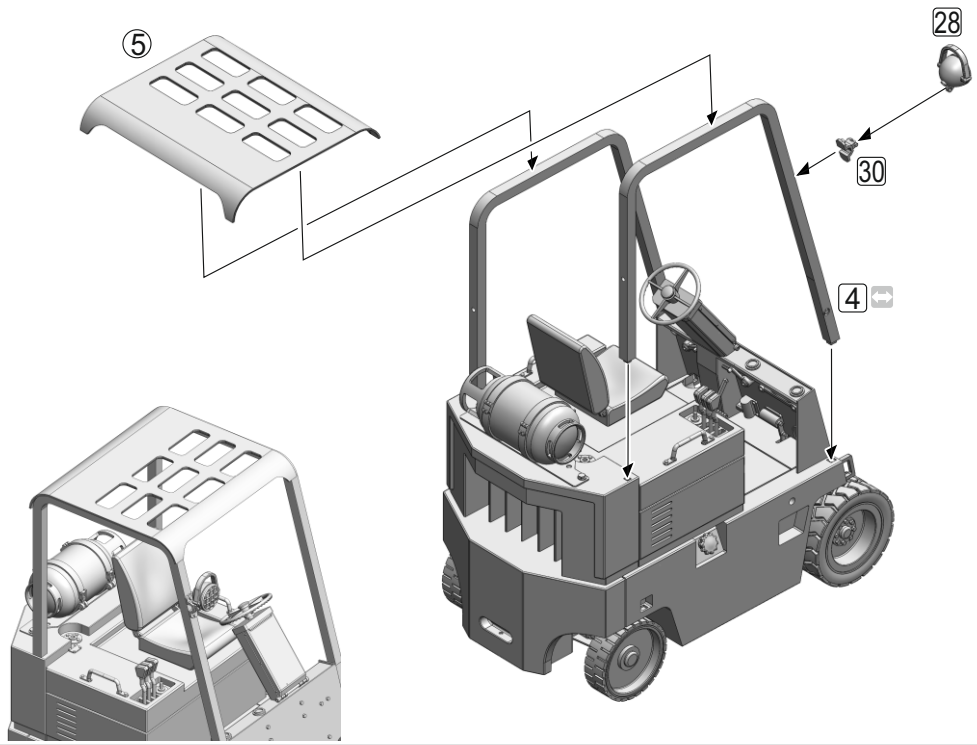

4

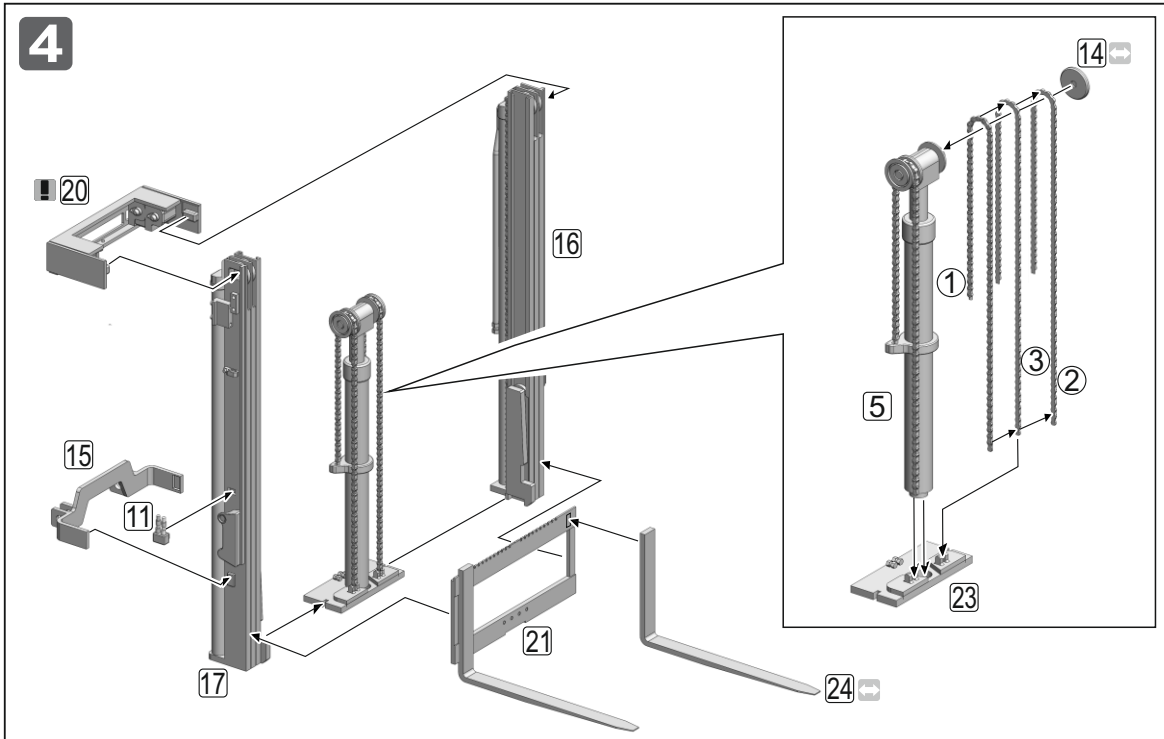

5

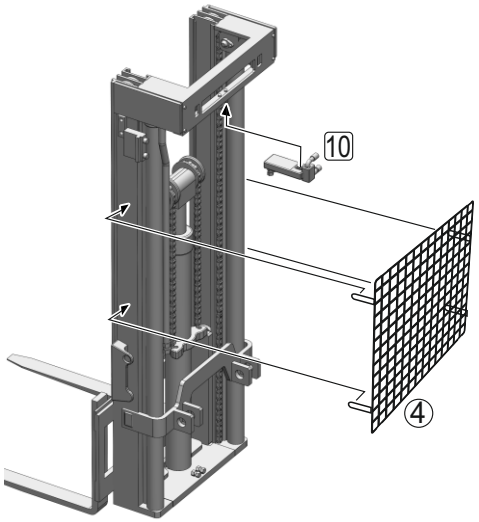

6

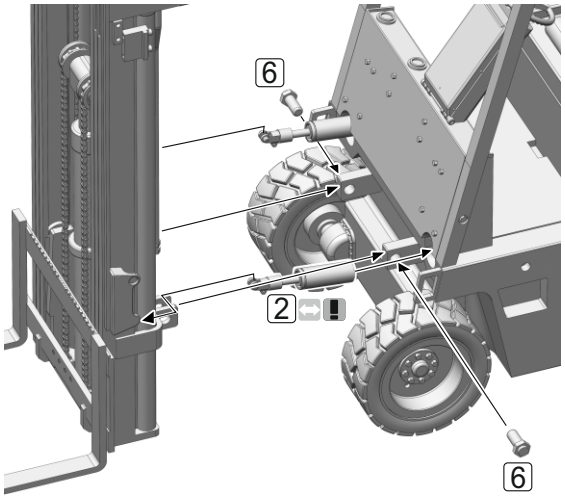

Decals

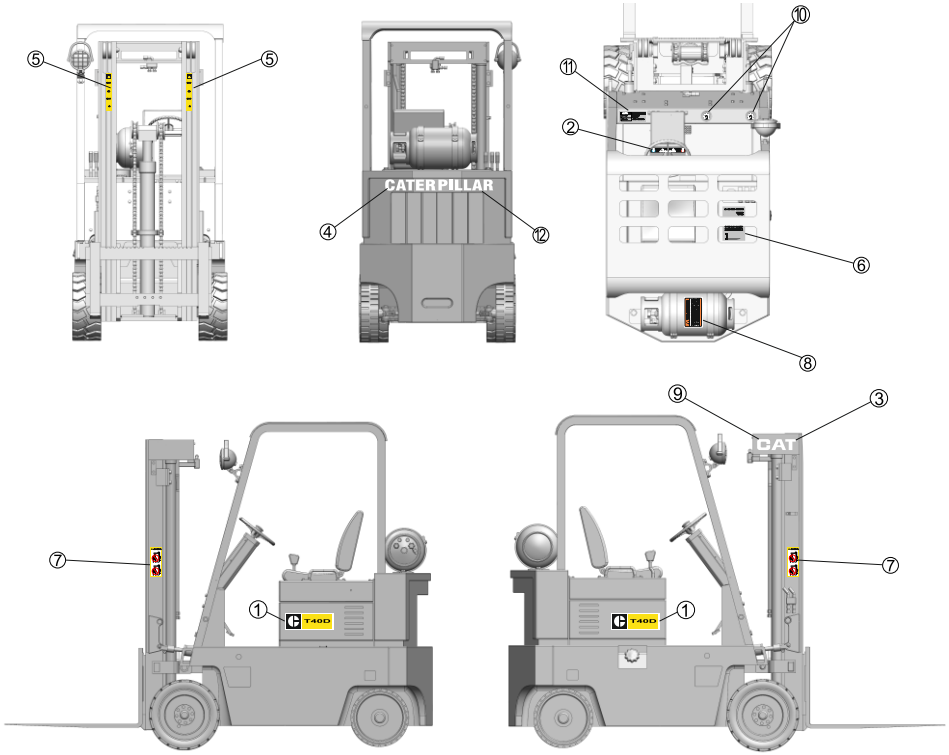



ROYAL MODEL - Via E. Montale, 19-95030 Pedara(CT) ITALY Tel. +39 95 780 0707
E-mail: info@royalmodel.com - Internet: www.royalmodel.com
©(2023) ROYAL MODEL