ROYAL MODEL
DIORAMA ACCESSORIES
Royal Model by Roberto Reale
RO Box 25 - 95039 - Trecastagni (CT) ITALY FAX +39-95-7809911

Panzer IV Ausf. J part 2°
Sd. Kfz. 161/2

NO. 108
1/35 scale

microdetails set

For best results in the assembling of photo-etched parts use cyanoacrylate glue. Always remember to use cyanoacrylate glue in a well ventilated area. Before assembly be sure to remove all parts to be substituted with photo-etched parts.

It is advised before assembly to study well the instructions which accompany this MICRODETAILS SET plus any other sufficient documentation.

Note that some particulars illustrated in the instructions have been enlarged for easy identification.

◯ Remove the plastic part to be substitute with the photo-etched part. ● Repeat same operation for the other side.

Hupper hull details assembly.

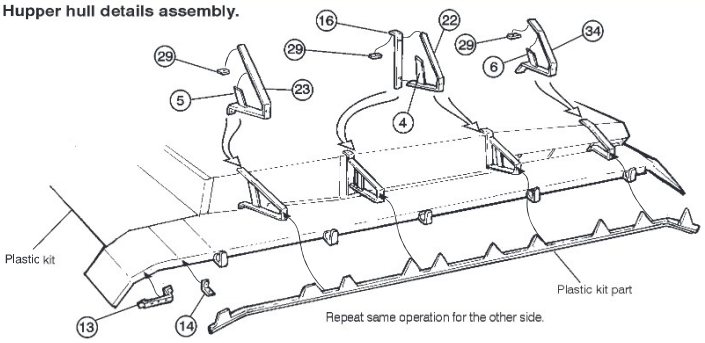

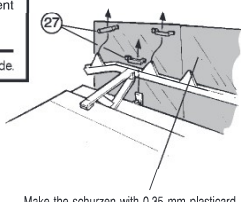

Make the schurzen with 0,35 mm plasticard.
For the size see the scheme under illustrated.

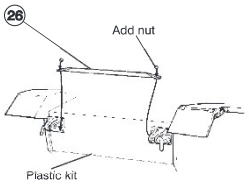

Turret details assembly.

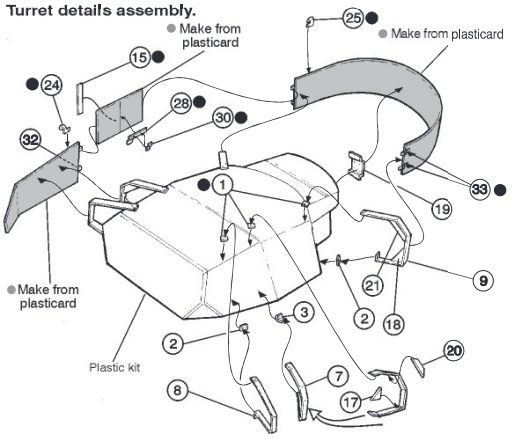

Repeat same operation for the other side.

● Although the schurzen of the turret are contained in the plastic kit, for better realism, we advise to make the from 0,35 mm plasticard, following carefullythe scheme showed in the drawing.

Schürzen scheme 1/35 scale

Armoured skirt (schürzen)

Make the schurzen
with plasticard of 0,35 mm

Follow the exact lay out of schürzen as shown.

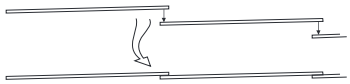

Not on scale

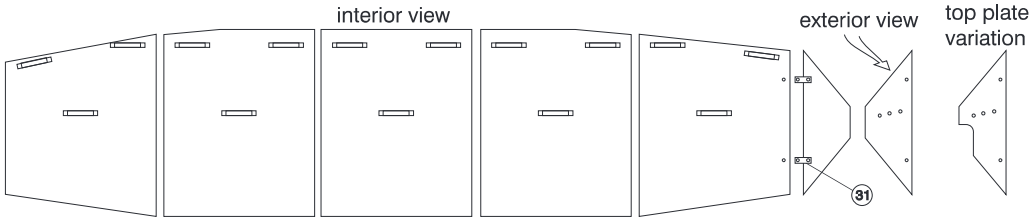

Turret schürzen

Make the schürzen
with plasticard of 0,35 mm

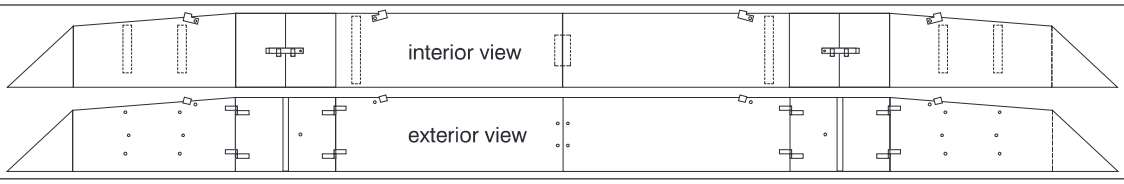

Drawings by **ROYAL MODEL** (1996)