ROYAL® MODEL
DIORAMA ACCESSORIES

ITEM NO. 450

MICRODETAILS SET
1/35 Scale

"Stowage Boxes" Panther

For best results in the assembling of photo-etched use cyanoacrylate glue. Always remember to use cyanoacrylate glue in a well ventilated area. Before assembling be sure to remove all the parts to be substituted with photo-etched parts. It is advisable before assembling to study well the instructions which accompany this kit plus any other sufficient documentation. It is advise to heat the metal parts before glueing, once the metal is hot it will be easier to bend.

REPEAT SAME OPERATION FOR THE OTHER SIDE | TO BEND | TO FOLD | PK PLASTIC KIT PART | ? FACULTATIVE

1

For to make the ribs of parts no.2-7 to press into the refence points with a punch as shown below.

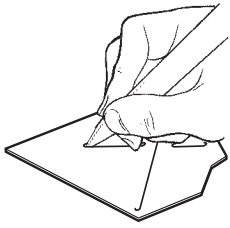

Remember to select the ribes of Panther type choiced, as showed on the photo-etched parts.

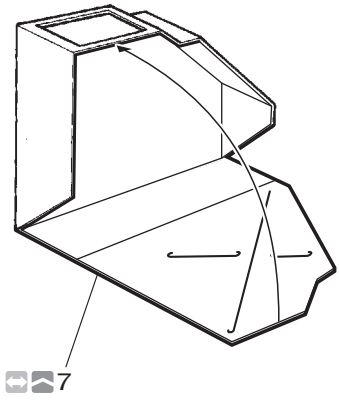

2

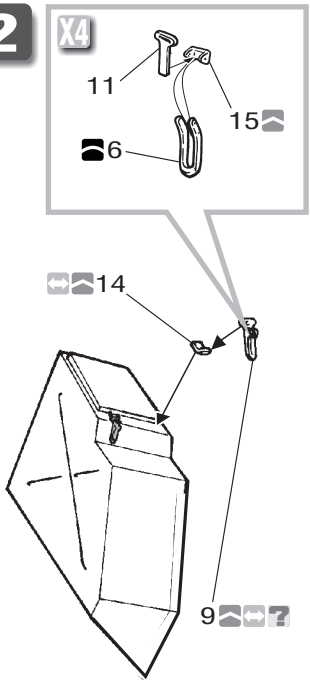

3

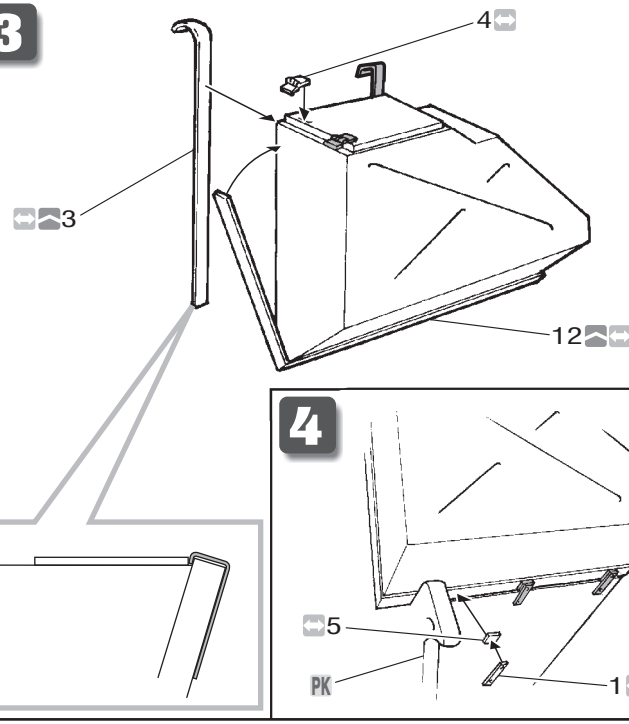

4

ROYAL MODEL - PO BOX 25 - 95039 TRECASTAGNI (CT) ITALY Tel. +39 95 780 0707-Fax +39 95 780 99 11
E-mail: info@royalmodel.com - Internet: www.royalmodel.com
©(2005) ROYAL MODEL