ROYAL MODEL
DIORAMA ACCESSORIES

ITEM NO. 399

MICRODETAILS SET
1/35 Scale

DRAGON WAGON (part 3)

The parts included in this kit are to be assembled in conjunction with the Tamiya kit. For best results in the assembling of photo-etched and resin parts use cyanoacrylate glue. Always remember to use cyanoacrylate glue in a well ventilated area. Before assembling be sure to remove all the parts to be substituted with photo-etched parts. It is advisable before assembling to study well the instructions which accompany this kit plus any other sufficient documentation.

REMOVE OR SUBSTITUTE THE PLASTIC KIT PART WITH ROYAL MODEL PART | X2 MAKE 2 PIECES | RESIN ROD | PK PLASTIC KIT PART | MP METAL PART | RP RESIN PART | REPEAT SAME OPERATION FOR THE OTHER SIDE

1

Make the rod as shown below.

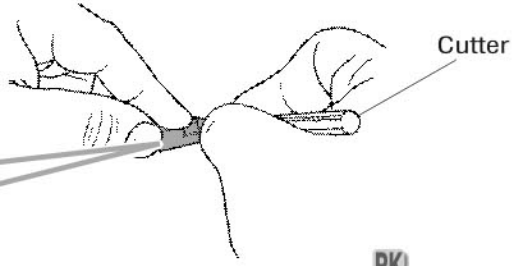

Photo etched part (A-B)

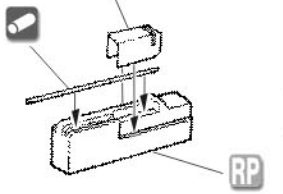

X2 A

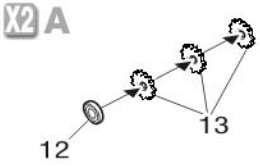

X2 B

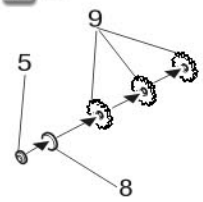

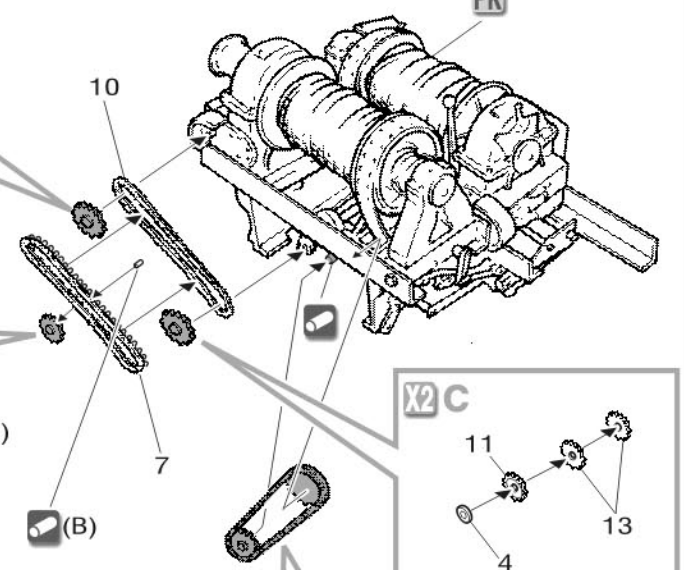

X2 C

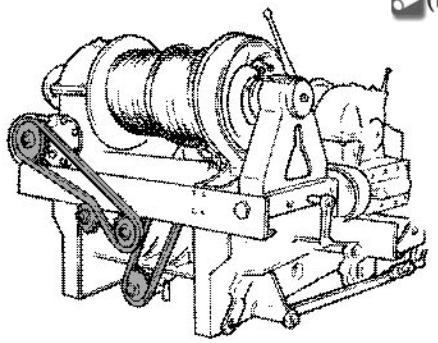

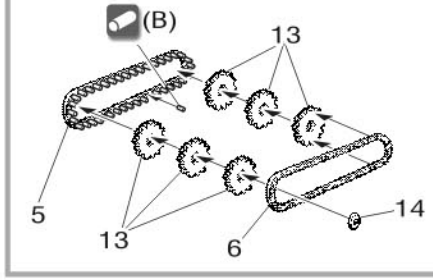

2

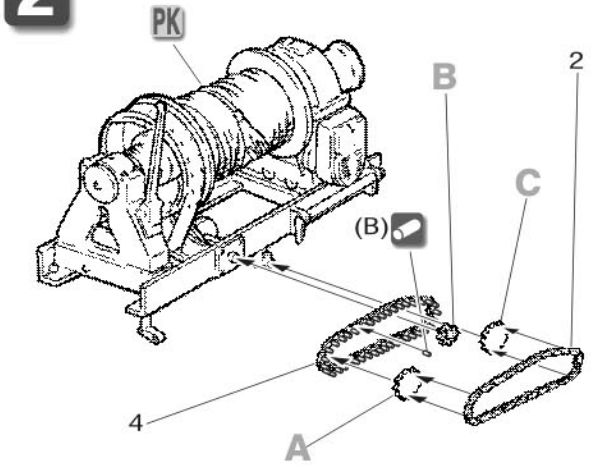

3

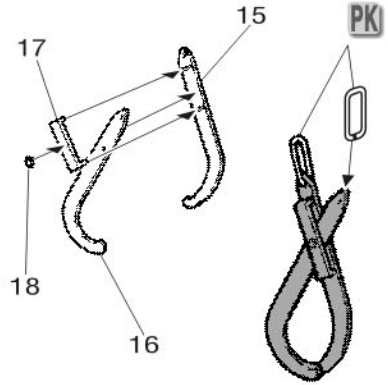

4

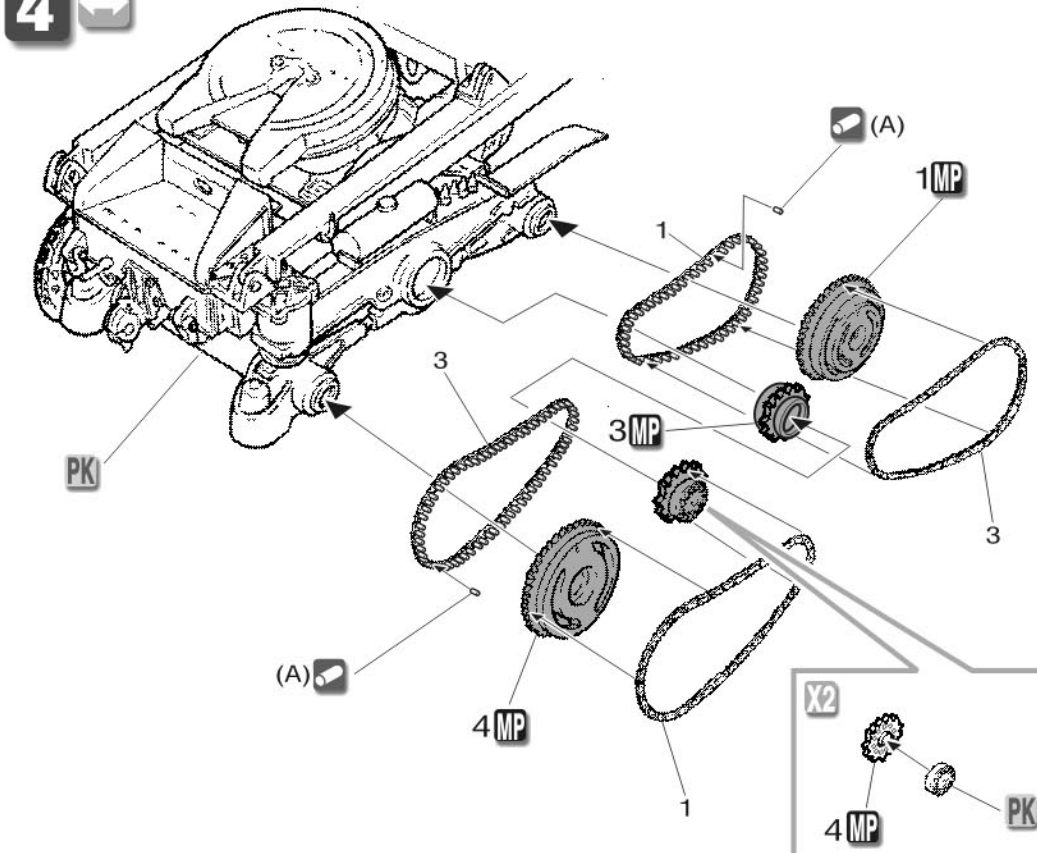

X2

ROYAL MODEL BY REALE ROBERTO - PO BOX 25 - 95039 TRECASTAGNI (CT) ITALY Tel. +39 95 780 6707-Fax +39 95 780 99 11
e-mail:info@royalmodel.com - Internet:www.royalmodel.com
©(2004) ROYAL MODEL