ROYAL MODEL
DIORAMA ACCESSORIES

MICRODETAILS SET
1/35 Scale

"Wire Mesh Skirts" Panzer IV Ausf. J Late (Part 2°)

ITEM NO. 364

The parts included in this kit are to be assembled in conjunction with the Dragon kit . For best results in the assembling of photo-etched and resin parts use cyanoacrylate glue. Always remember to use cyanoacrylate glue in a well ventilated area. Before assembling be sure to remove all the parts to be substituted with photo-etched parts. It is advisable before assembling to study well the instructions which accompany this MICRODETAILS SET plus any other sufficient documentation.It is advise to heat the metal parts before glueing, once the metal is hot it will be easier to bend.

REPEAT SAME OPERATION FOR THE OTHER SIDE | PK PLASTIC KIT PART | TO FOLD | TO BEND

This microdetails set must be used in conjunction with the ROYAL MODEL set NO. 363.

1 Repeat the same operation for the other side.

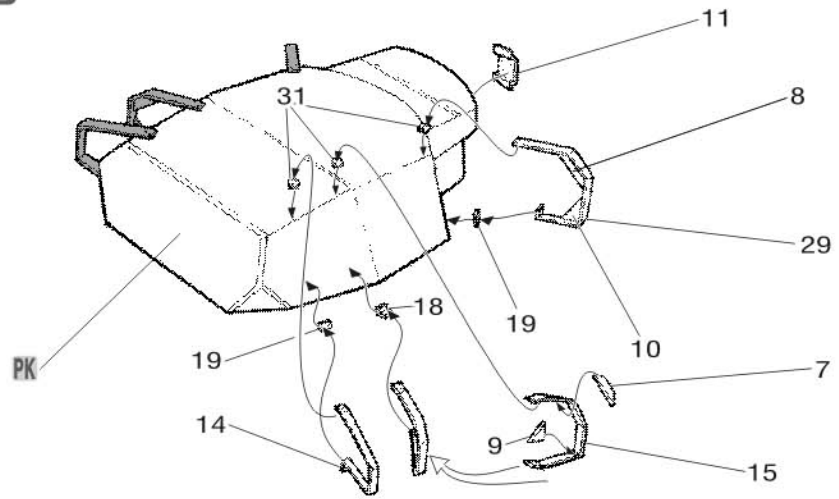

2 Repeat the same operation for the other side.

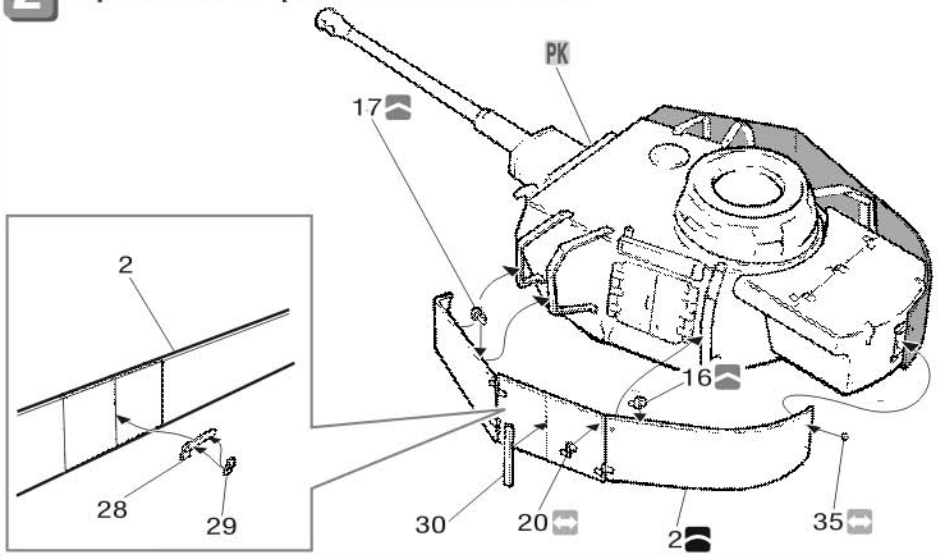

3 Repeat the same operation for the other side.

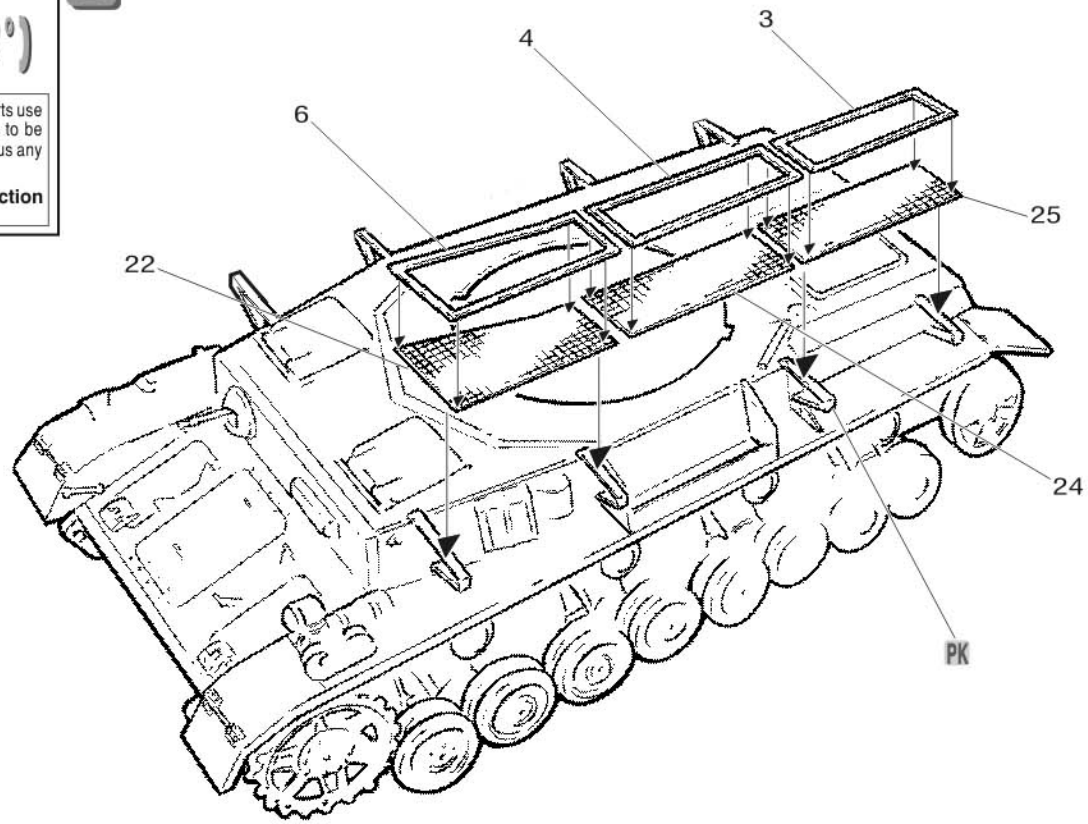

ROYAL MODEL BY REALE ROBERTO - PO BOX 25 - 95039 TRECASTAGNI (CT) ITALY
Tel. +39 95 780 0707-Fax +39 95 780 99 11
e-mail:info@royalmodel.com - internet:www.royalmodel.com

©(2004) ROYAL MODEL