ROYAL® MODEL
DIORAMA ACCESSORIES

ITEM NO. 346

M18 Hellcat MUFFLERS

The parts included in this kit are to be assembled in conjunction with the **AFV** or **Academy** kit . For best results in the assembling of resin parts use cyanoacrylate glue. Always remember to use cyanoacrylate glue in a well ventilated area. It is advisable before assembling to study well the instructions which accompany this Set plus any other sufficient documentation.

If ulterior details are required for your model it is possible to use added set ROYAL MODEL no. 332-338.

REPEAT SAME OPERATION FOR THE OTHER SIDE

PK PLASTIC KIT PART

R RESIN PART

1

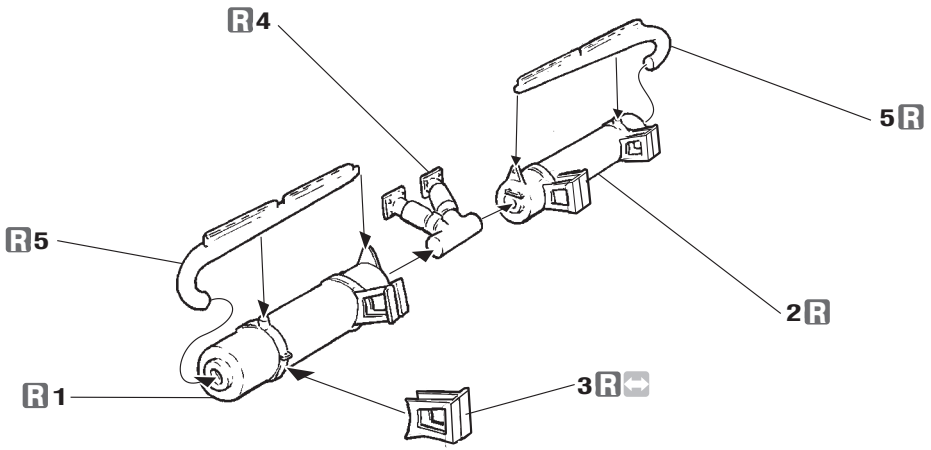

2

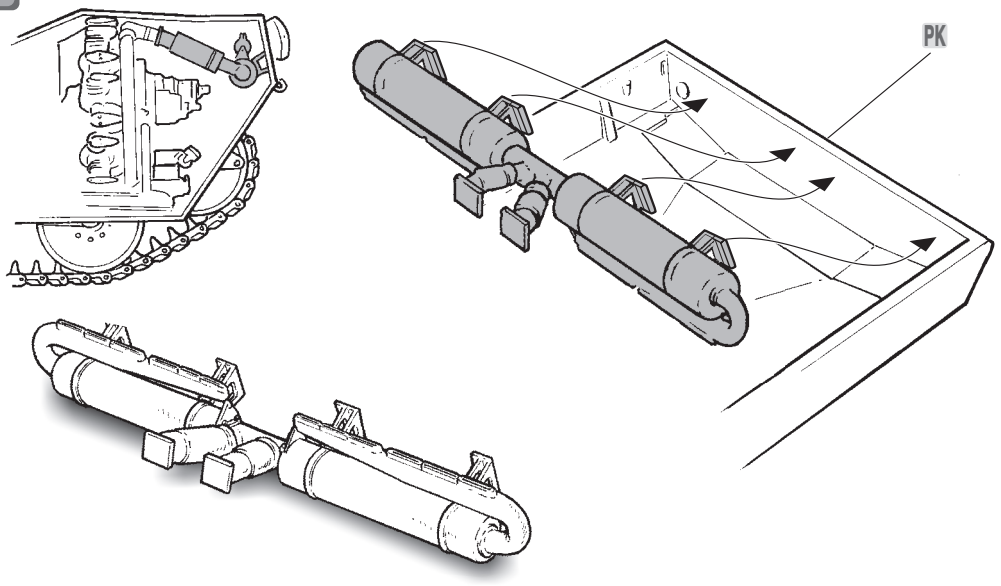

ROYAL MODEL BY REALE ROBERTO - PO BOX 25 - 95039 TRECASTAGNI (CT) ITALY
Tel. +39 95 780 0707-Fax +39 95 780 99 11
e-mail:info@royalmodel.com - internet:www.royalmodel.com

©(2004) ROYAL MODEL