ROYAL MODEL
DIORAMA ACCESSORIES

ITEM NO. 330

MICRODETAILS SET
1/35 Scale

U.S. M8/M 20

The parts included in this kit are to be assembled in conjunction with the **Tamiya** kit . For best results in the assembling of photo-etched and resin parts use cyanoacrylate glue. Always remember to use cyanoacrylate glue in a well ventilated area. Before assembling be sure to remove all the parts to be substituted with photo-etched parts. It is advisable before assembling to study well the instructions which accompany this MICRODETAILS SET plus any other sufficient documentation. It is advise to heat the metal parts before glueing, once the metal is hot it will be easier to bend.

REPEAT SAME OPERATION FOR THE OTHER SIDE | SUBSTITUTE THE PLASTIC PART WITH ROYAL MODEL PART | ADD NUT | OPTIONAL | TO FOLD | PK PLASTIC KIT PART

1 Make two pieces.

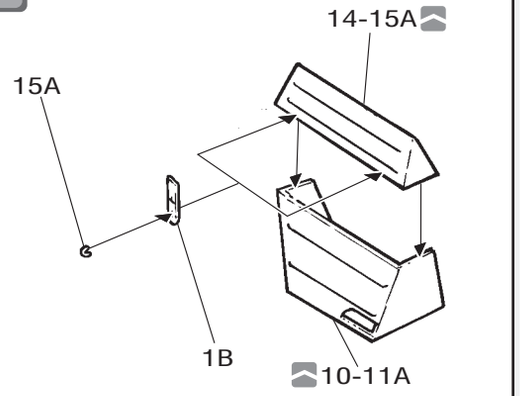

2 For to make the ribs of parts no.1-2-5-7-8-9-10 -11-12-13-14-15A to press into the refence points with a punch as shown below.

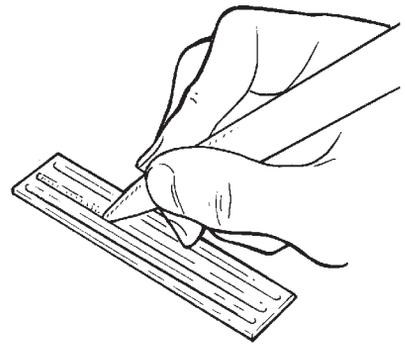

3 Repeat the same operation for the other side.

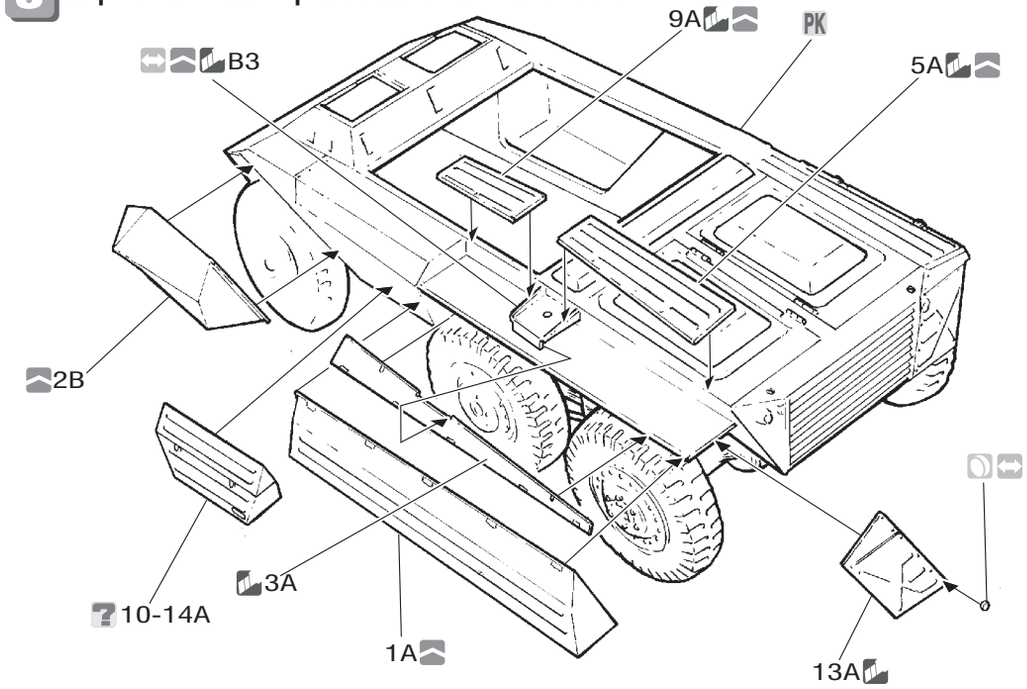

4 Repeat the same operation for the other side.

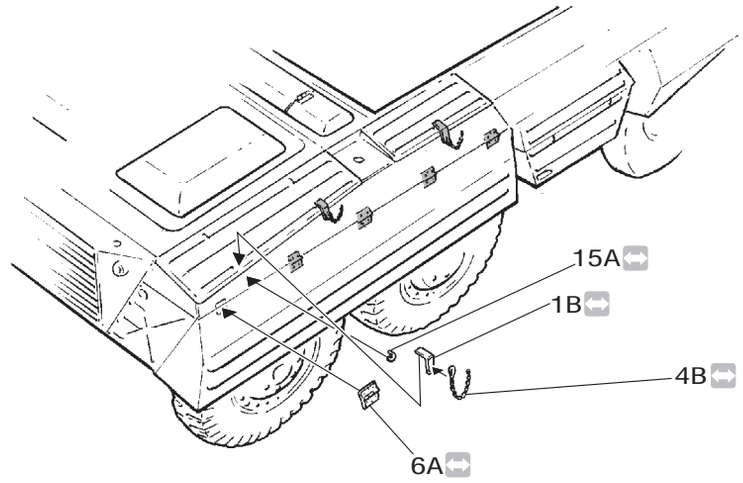

ROYAL MODEL BY REALE ROBERTO - PO BOX 25 - 95039 TRECASTAGNI (CT) ITALY
Tel. +39 95 780 0707-Fax +39 95 780 99 11
e-mail:info@royalmodel.com - Internet:www.royalmodel.com
©(2004) ROYAL MODEL