MICRODETAILS SET
No. 304
1/35 Scale

ROYAL MODEL
DIORAMA ACCESSORIES
Royal Model by Reale Roberto
P.O. Box 25 - 95039 - Trecastagni (CT) ITALY

"FENDERS"

Jagdtiger Sd.Kfz. 186

The parts included in this kit are to be assembled in conjunction with the **DRAGON** kit no. 6050-6051. For best results in the assembling of photo-etched and resin parts use cyanoacrylate glue. Always remember to use cyanoacrylate glue in a well ventilated area. Before assembly be sure to remove all parts to be substituted with photo-etched parts. It is advised before assembly to study well the instructions which accompany this MICRODETAILS SET plus any other sufficient documentation. Note that some particulars illustrated in the instructions have been enlarged for easy identification.

If ulterior details are required for your model it is possible to use added set ROYAL MODEL no. 297-306-308-176.

(00) Photo-etched part. ● Repeat same operation for the other side. ○ Substitute the plastic part with the photo-etched or resin part.

1 Fenders assembly.

Repeat same operation for the other side

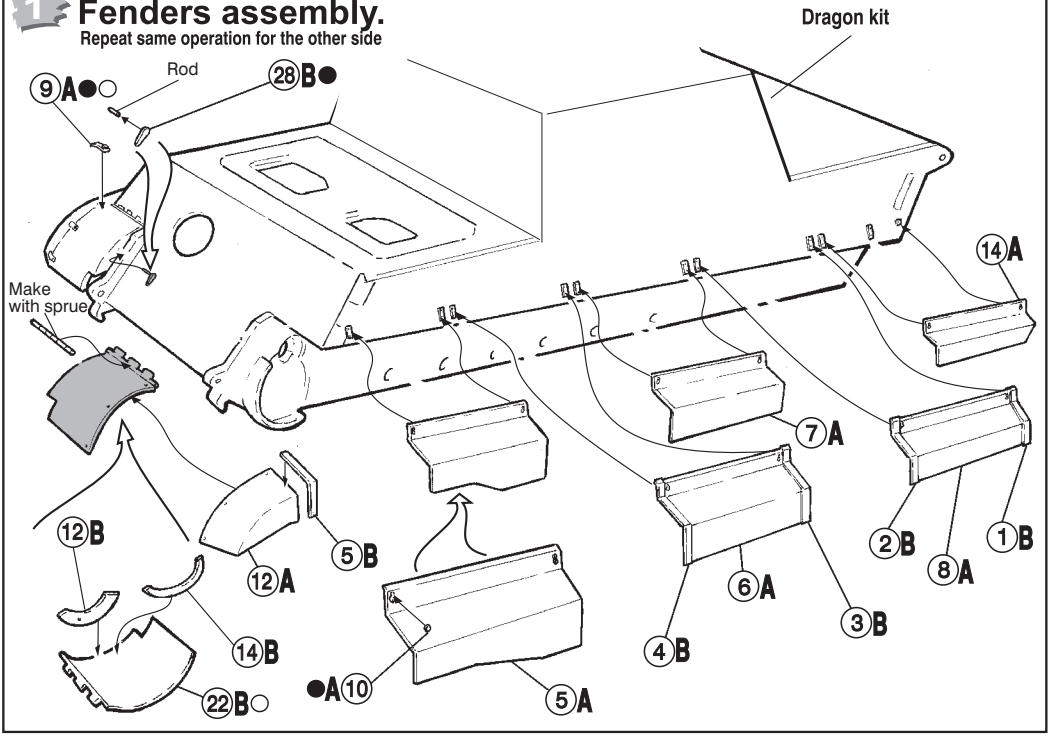

2 Fenders assembly.

Repeat same operation for the other side

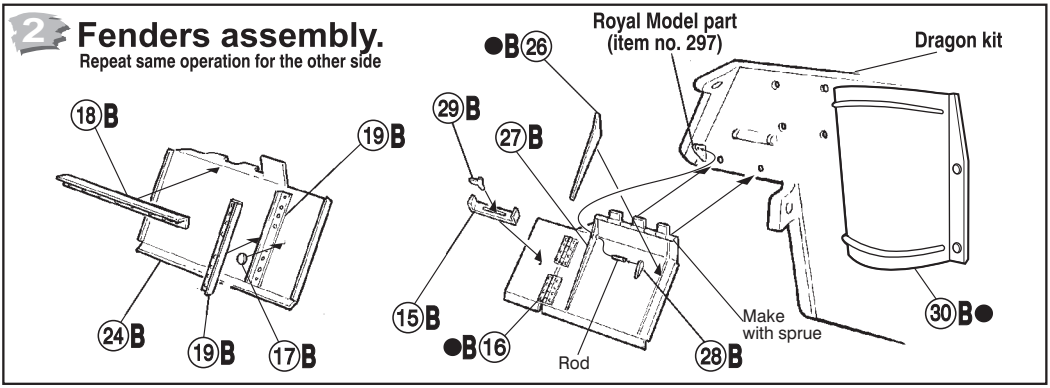

© (2003) ROYAL MODEL