ROYAL MODEL
DIORAMA ACCESSORIES
Royal Model by Reale Roberto
P.O. Box 25 - 96039 - Trecastagni (CT) ITALY

MICRODETAILS SET
No. 211
1/35 Scale

.50 Cal Machine Gun

For best results in the assembling of photo-etched and resin parts use cyanoacrylate glue. Always remember to use cyanoacrylate glue in a well ventilated area. Note that some particulars illustrated in the instructions have been enlarged for easy identification.

.50 Cal Machine Gun assembly.

R Resin part
00 Photo-etched part

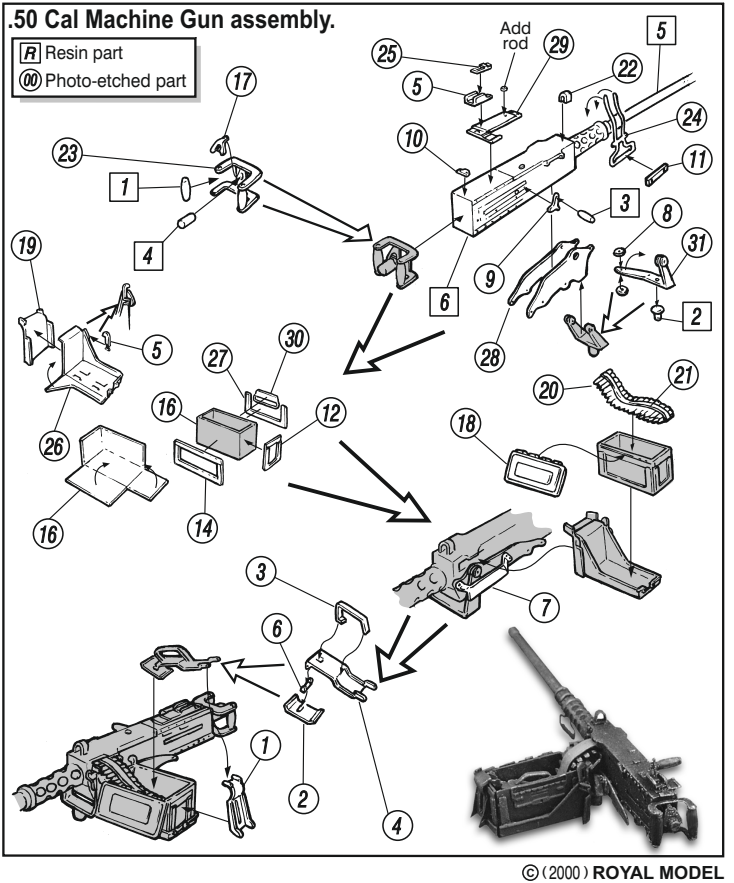

© (2000) ROYAL MODEL