SUPER ACCESSORIES
No. 189
1/35 Scale

ROYAL MODEL
DIORAMA ACCESSORIES

Royal Model by Reale Roberto
P.O.Box 25 - 95039 - Trecastagni (CT) ITALY

PANZER II transmission

The transmission parts included in this kit are to be assembled in conjunction with all German tanks of the Panzer II family. For best results in the assembling of resin parts use cyanoacrylate glue. Always remember to use cyanoacrylate glue in a well ventilated area.

TRANSMISSION ASSEMBLY



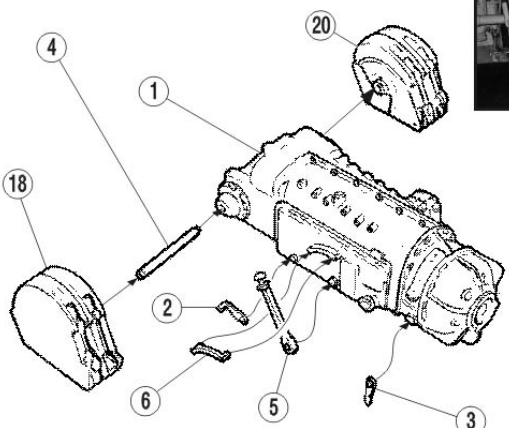





(Photo by J.J. Dzingel)

© (1998) ROYAL MODEL