SUPER ACCESSORIES
No. 176
1/35 Scale

ROYAL MODEL
DIORAMA ACCESSORIES
Royal Model by Reale Roberto
P.O.Box 25 - 95039 - Trecastagni (CT) ITALY

Jack with bracket (German tanks)

The parts included in this kit are to be assembled in conjunction with all German tanks type. For best results in the assembling of photo-etched and resin parts use cyanoacrylate glue. Always remember to use cyanoacrylate glue in a well ventilated area. Note that some particulars illustrated in the instructions have been enlarged for easy identification.

JACK ASSEMBLY

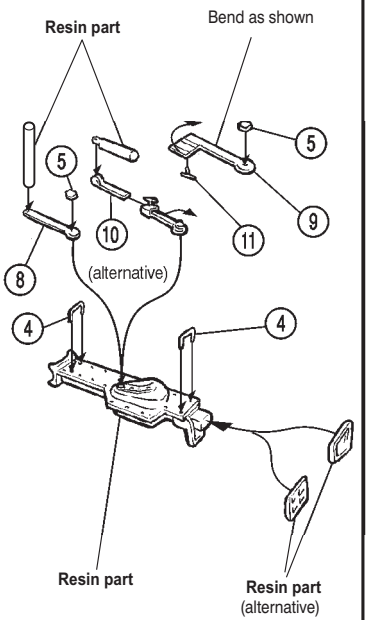

BRACKET (A) ASSEMBLY

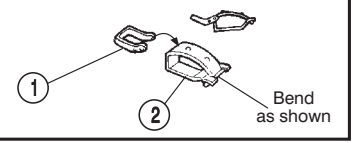

BRACKET (B) ASSEMBLY

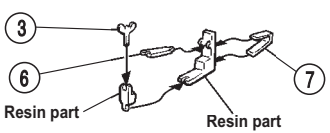

(use the part no. 7 for only StuG III, as shown in the drawing illustrated on the front of the package)

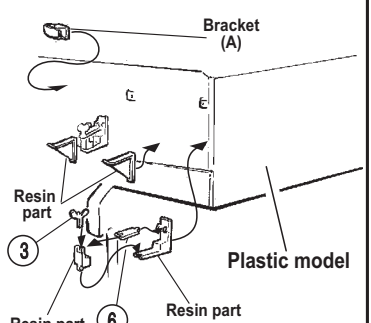

©(1998) ROYAL MODEL