ROYAL MODEL ®
DIORAMA ACCESSORIES
Royal Model by Reale Roberto,
P.O. BOX 25 - 95039 - Trecastagni (CT) ITALY

Panther A
interior details n. 2

NO. 098

1/35 super interiordetails

The parts included in this kit are to be assembled in conjunction with the Italeri kit NO. 270.
For best results in the assembling of photo-etched and resin parts use cyanoacrylate glue.
Always remember to use cyanoacrylate glue in a well ventilated area.
Before assembly be sure to remove all parts to be substituted with photo-etched and resin parts.
It is advised before assembly to study well the instructions which accompany this SUPER INTERIORDETAILS plus any other sufficient documentation.
Note that some particulars illustrated in the instructions have been enlarged for easy identification.
In order to super detail your Panther you can make use of set ROYAL MODEL No. 095-079-077.

(00) Photo-etched part.
[00] Resin part.
● Repeat same operation for the other side.
○ Substitute the plastic part with the photo-etched part.

1 Interior hull details assembly

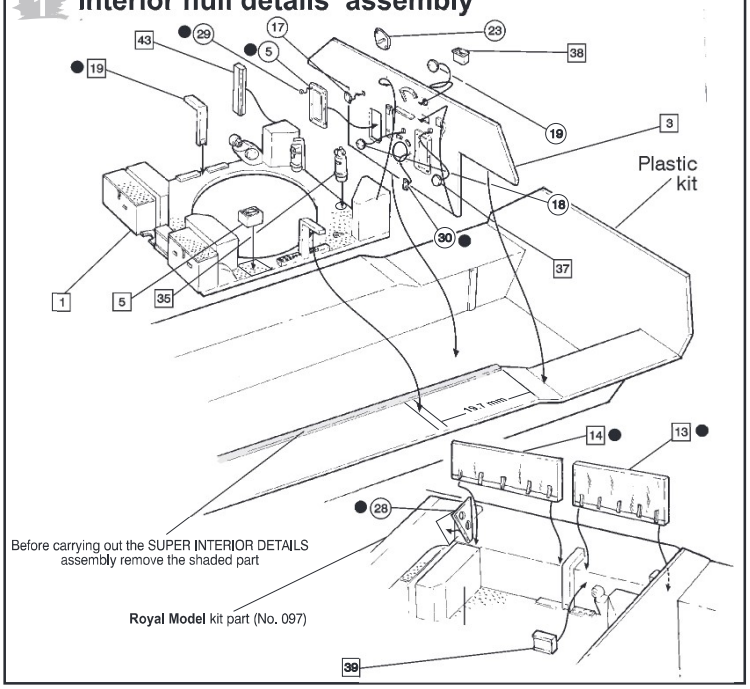

2 Interior turret details assembly

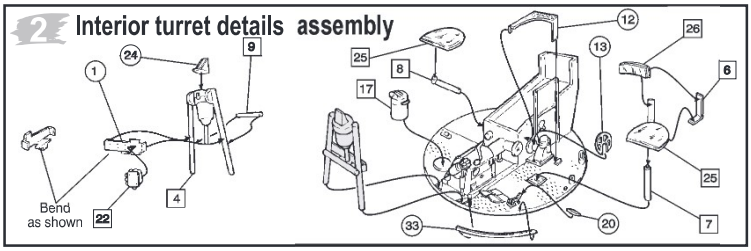

3 Interior turret details assembly

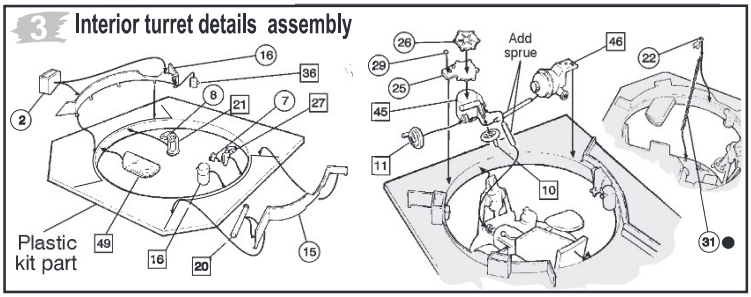

4 Interior turret details assembly

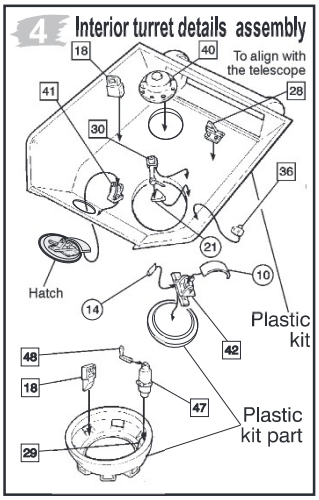

5 Loading breech details assembly

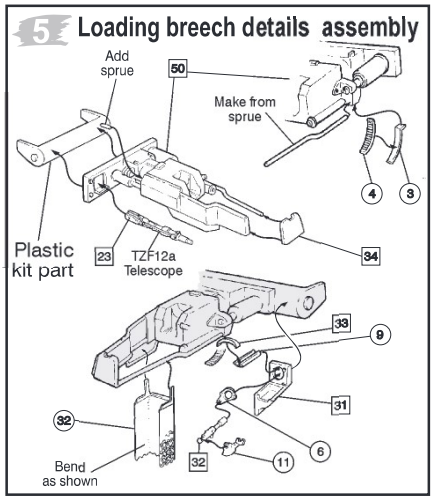

Drawings by **ROYAL MODEL** (1995)

ROYAL MODEL
DIORAMA ACCESSORIES
Royal Model by Rosalia Roberto.
P.O. BOX 25 - 95039 - Trecastagni | CT | ITALY

Panther A
interior details n. 2

NO. 098

1/35

RESIN PARTS SCHEME.

Remove the shaded area.

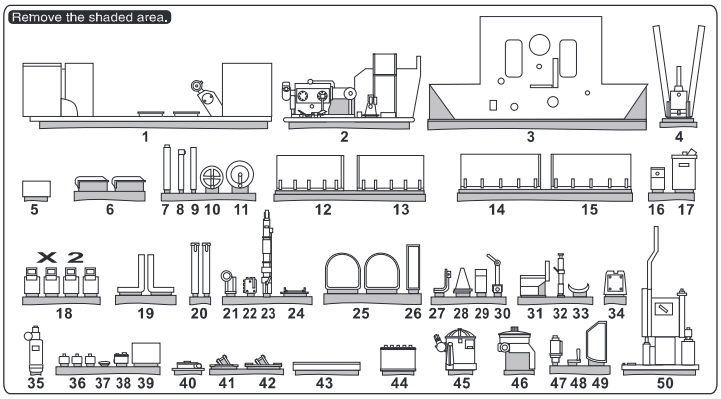

Drawings by **ROYAL MODEL** (1995)