ROYAL MODEL ®
DIORAMA ACCESSORIES
Royal Model by Reale Roberto
P.O.Box 25 - 95039 - Trecastagni (CT) ITALY

Mudguards SET
TIGER I

MICRODETAILS SET
No. 159
1/35 Scale



The parts included in this kit are to be assembled in conjunction with the Tamiya kit no. 35146-35177-35194-35216. For best results in the assembling of photo-etched and resin parts usecyanoacrylate glue.Always remember to use cyanoacrylate glue in a well ventilated area. Before assembly be sure to remove all parts to be substituted with photo-etched and resin parts.It is advised before assembly to study well the instructions which accompany this MICRODETAILS SET plus any other sufficient documentation.Note that some particulars illustrated in the instructions have been enlarged for easy identification.
If ulterior details are required for your models it is possible to use added sets ROYAL MODEL no. 158-160-176-063.

○ Substitute the plastic part with the photo-etched or resin part. ● Repeat same operation for the other parts.

1 Front and rear mudguards assembly.

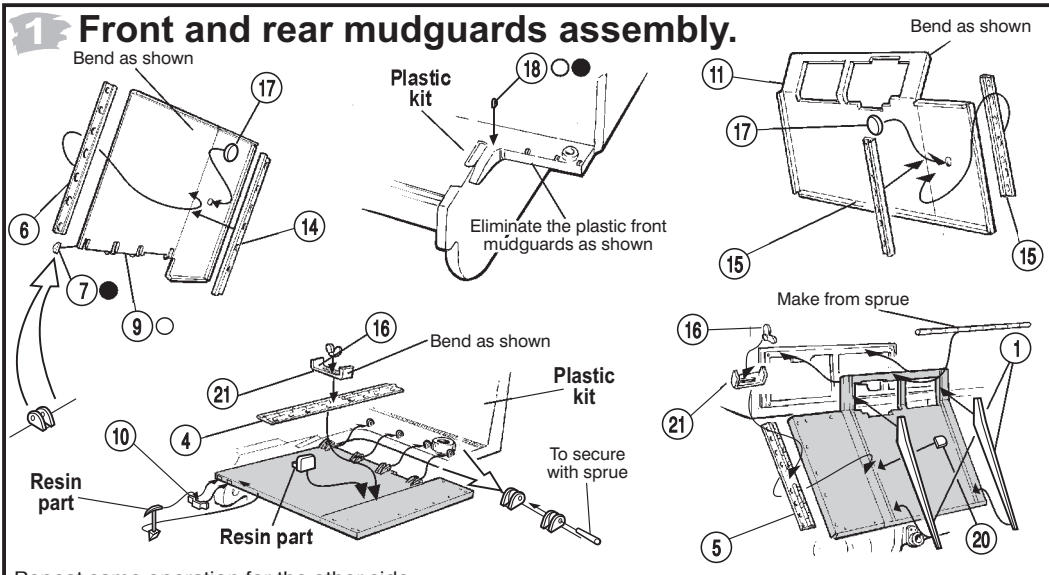

Repeat same operation for the other side.

2 Lateral mudguards assembly.

In order to give the mudguards a more realistic appearance it is advised to heat the metal parts before glueing them together. Once the metal is hot it will be easier to bend and dent without damaging the mudguards once they have been glued.

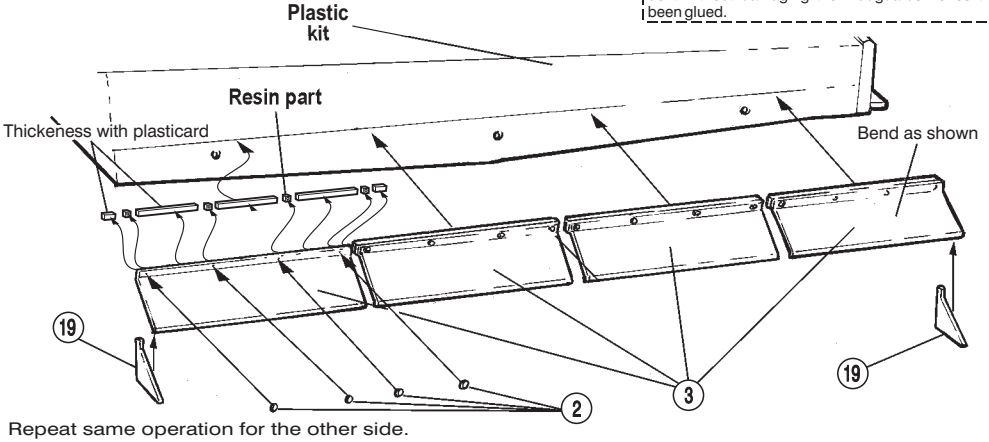

Repeat same operation for the other side.

©(1998) ROYAL MODEL