ROYAL MODEL ®
DIORAMA ACCESSORIES
Royal Model by Roberto Reale
P.O Box 25 - 95039 - Trecastagni (CT) ITALY FAX +39-95-7809911

# Armoured skirt (schürzen)
## STUG III Ausf. G

NO. 150

microdetails set

For best results in the assembling of photo-etched and resin parts use cyanoacrylate glue.Always remember to use cyanoacrylate glue in a well ventilated area.It is advised before assembly to study well the instructions which accompany this MICRODETAILS SET plus any other sufficient documentation.

### 1 Armour skirt assembling.

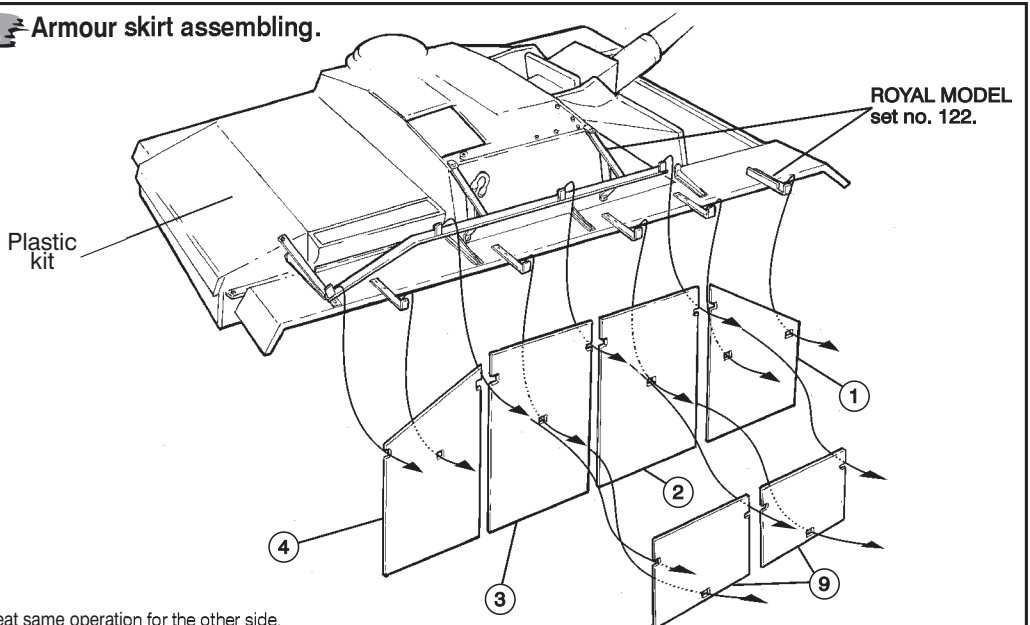


Repeat same operation for the other side.

© ROYAL MODEL (1997)