ROYAL MODEL ®
DIORAMA ACCESSORIES
Royal M odel b y R oberto R eale
P.O B ox 2 5 - 9 5039 - T recastagni (CT) I TALY F AX + 39-95-7809911

Jerrycans holder set

NO. 133

super accessories

For best results in the assembling of photo-etched parts use cyanoacrylate glue.Always remember to use cyanoacrylate glue in a well ventilated area.It is advised before assembly to study well the instructions which accompany this MICRODETAILS SET plus any other sufficient documentation.Note that some particulars illustrated in the instructions have been enlarged for easy identification.

● Repeat same operation for the other side.

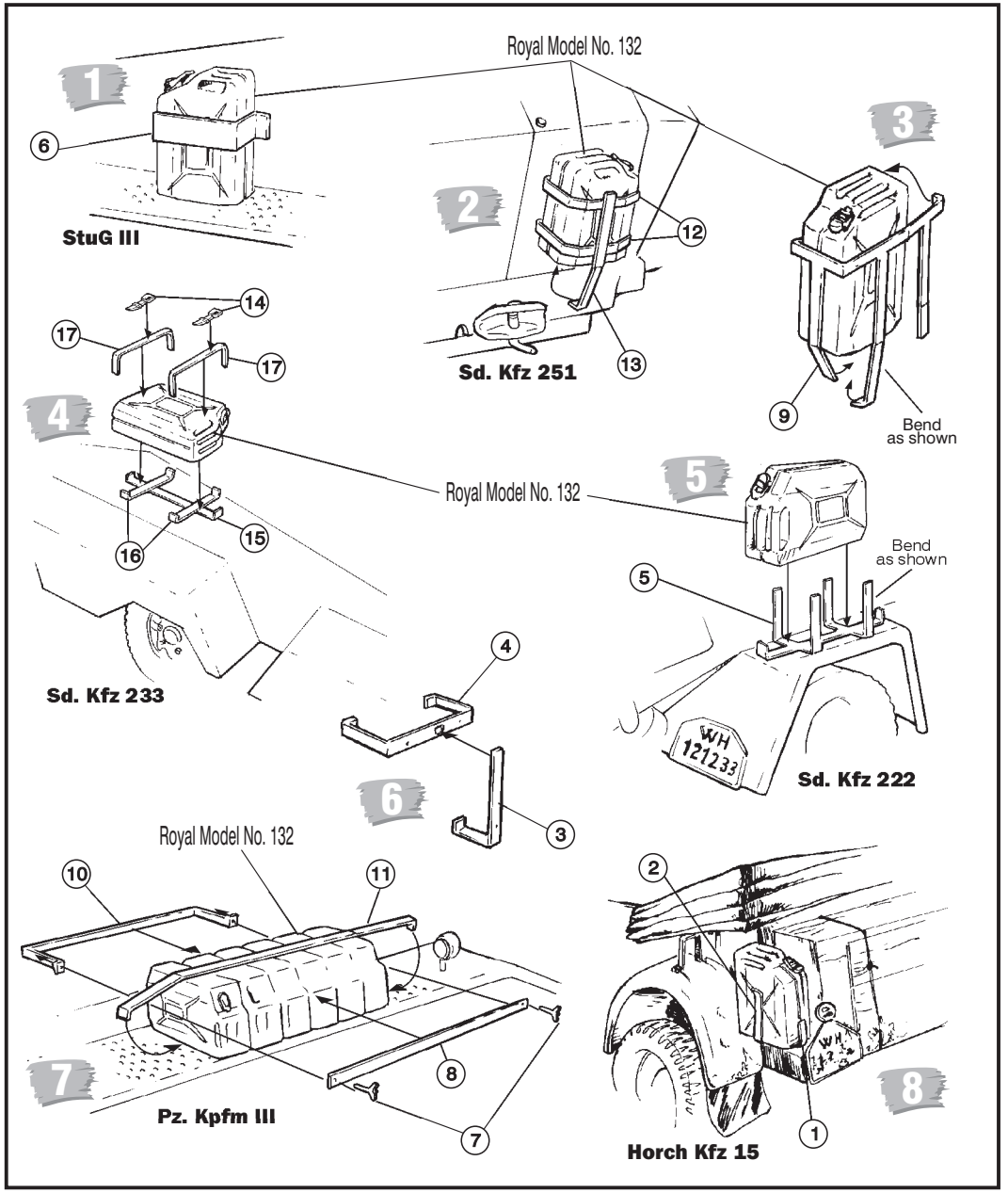

© ROYAL MODEL (1996)