ROYAL MODEL
DIORAMA ACCESSORIES
Royal Model by Reale Roberto
P.O. BOX 25 - 95039 - Tricastagni (CT) ITALY

NO. 093

Panther trasmission 1/35

The parts included in this kit are to be assembled in conjunction with the Tamiya ,Italeri or Dragon kit.
For best results in the assembling of resin parts use cyanoacrylate glue.
Always remember to use cyanoacrylate glue in a well ventilated area.
It is advised before assembly to study well the instructions which accompany this MICRODETAILS SET plus any other sufficient documentation.
Note that some particulars illustrated in the instructions have been enlarged for easy identification.

Resin parts scheme.

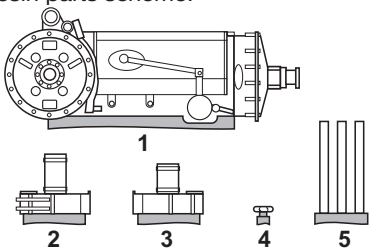

Remove the shaded area.

Trasmission assembly.

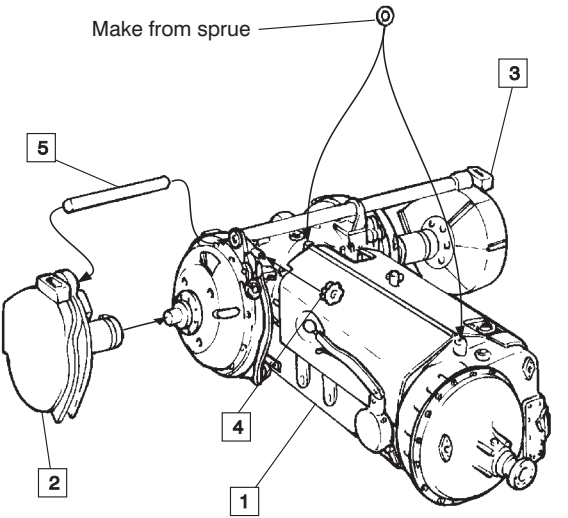

Drawings by **ROYAL MODEL** (1995)