ROYAL MODEL
DIORAMA ACCESSORIES
Royal Model by Reale Roberto,
Via Federico De Roberto, 65 - 95039 - Trecastagni (CT) ITALY

TIGER II mudguards

No. 021

microdetails set

The parts included in this kit are to be assembled in conjunction with the Tamiya or Nichimo kit.For best results in the assembling of photo-etched and resin parts use cyanoacrylate glue.Always remember to use cyanoacrylate glue in a well ventilated area.

1

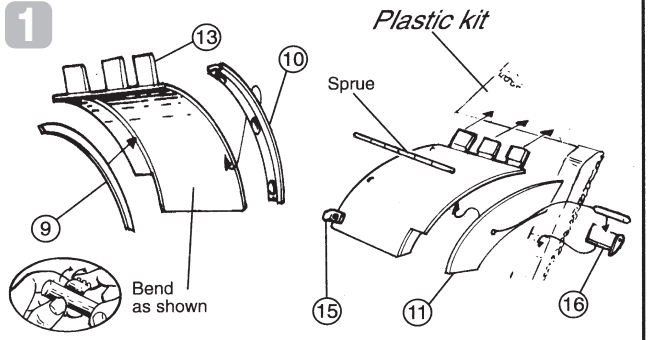

Front mudguards assembly

2

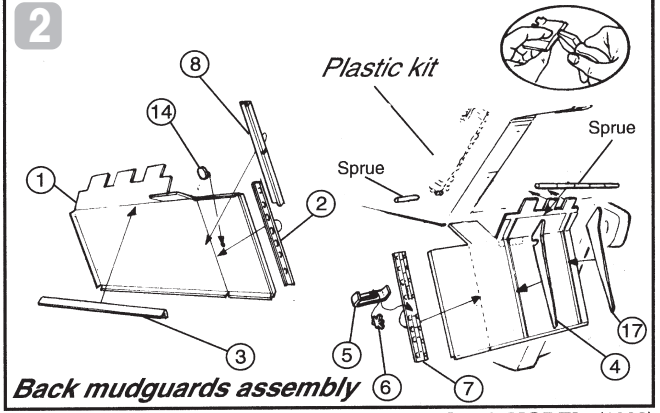

Back mudguards assembly

Drawings by **ROYAL MODEL** (1993)