ROYAL MODEL
DIORAMA ACCESSORIES
Royal Model by Reale Roberto,
Via Federico De Roberto, 65 - 95039 - Trecastagni (CT) ITALY

TIGER I mudguards

No. 020

microdetails set

The parts included in this kit are to be assembled in conjunction with the Tamiya or Nichimo kit.For best results in the assembling of photo-etched and resin parts use cyanoacrylate glue.Always remember to use cyanoacrylate glue in a well ventilated area.

1

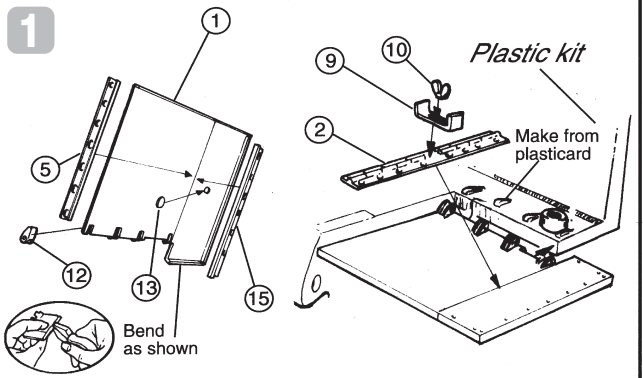

Front mudguards assembly

2

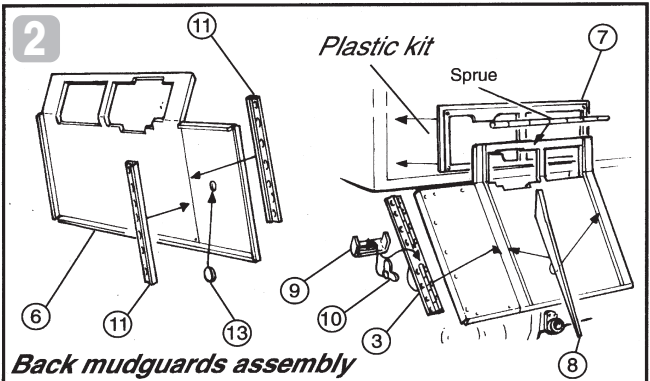

Back mudguards assembly

Drawings by **ROYAL MODEL** (1993)