ROYAL MODEL
DIORAMA ACCESSORIES

ITEM NO.642

1/35 scale

Farm accessories

For best results in the assembling of resin parts use cyanoacrylate glue. Always remember to use cyanoacrylate glue in a well ventilated area.

ROYAL MODEL - Via E. Montale, 19- 95030 PEDARA (CT) ITALY
e-mail: info@royalmodel.com - Internet: www.royalmodel.com
Customercare: customercare@royalmodel.com

1

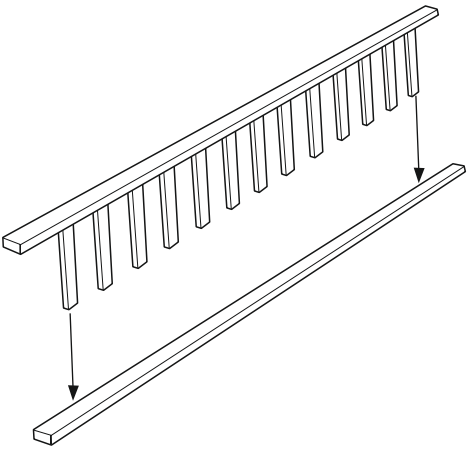

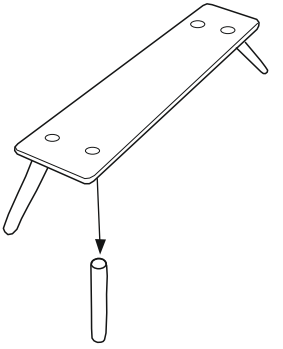

REPEAT SAME OPERATION FOR THE OTHER SIDE

2

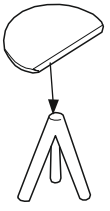

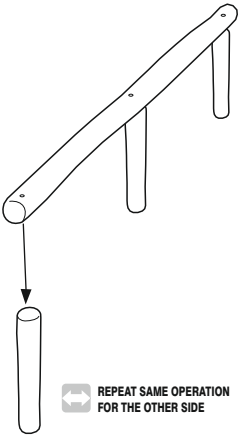

REPEAT SAME OPERATION FOR THE OTHER SIDE

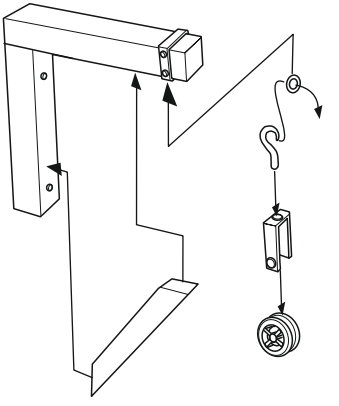

©(2011) ROYAL MODEL