ROYAL MODEL
DIORAMA ACCESSORIES

Wooden boat jetty Pacific (WWII)

Item no. 531 — **1/35 scale**

For best results in the assembling of resin parts use cyanoacrylate glue. Always remember to use cyanoacrylate glue in a well ventilated area.

REPEAT SAME OPERATION FOR THE OTHER SIDE — X2 MAKE 2 PIECES — REPEAT SAME OPERATION FOR THE OTHER SIDE

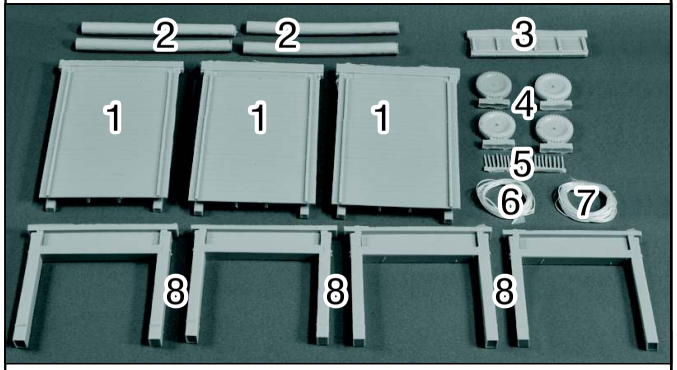

1 X3

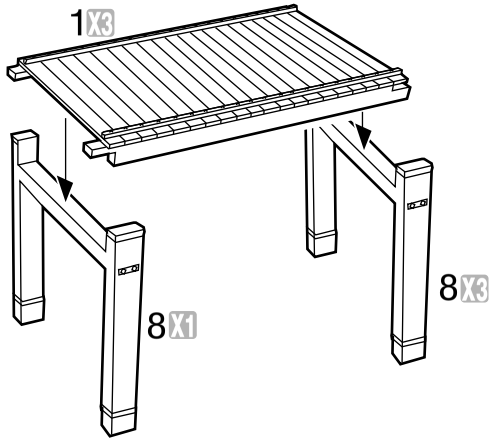

2

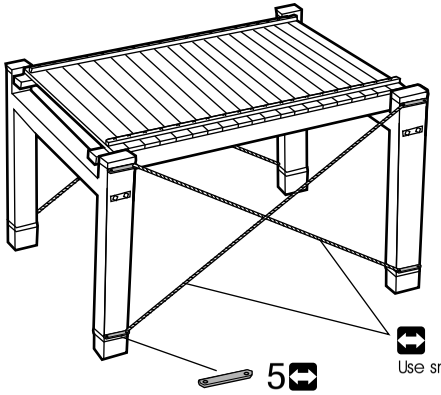

3

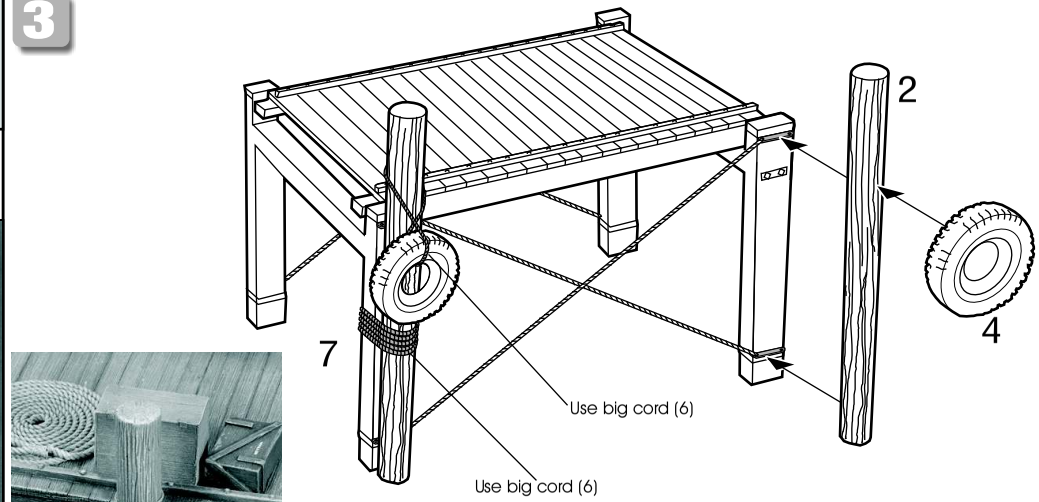

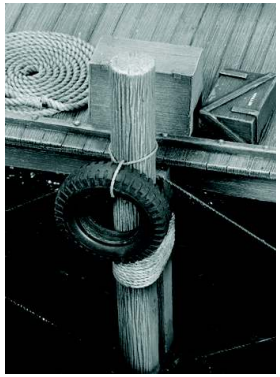

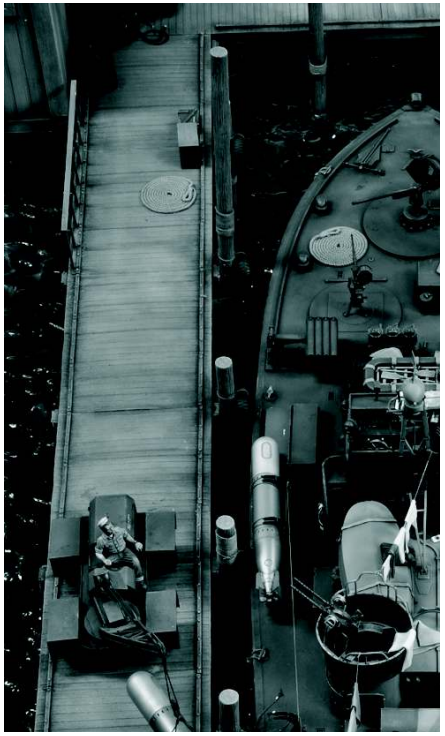

4



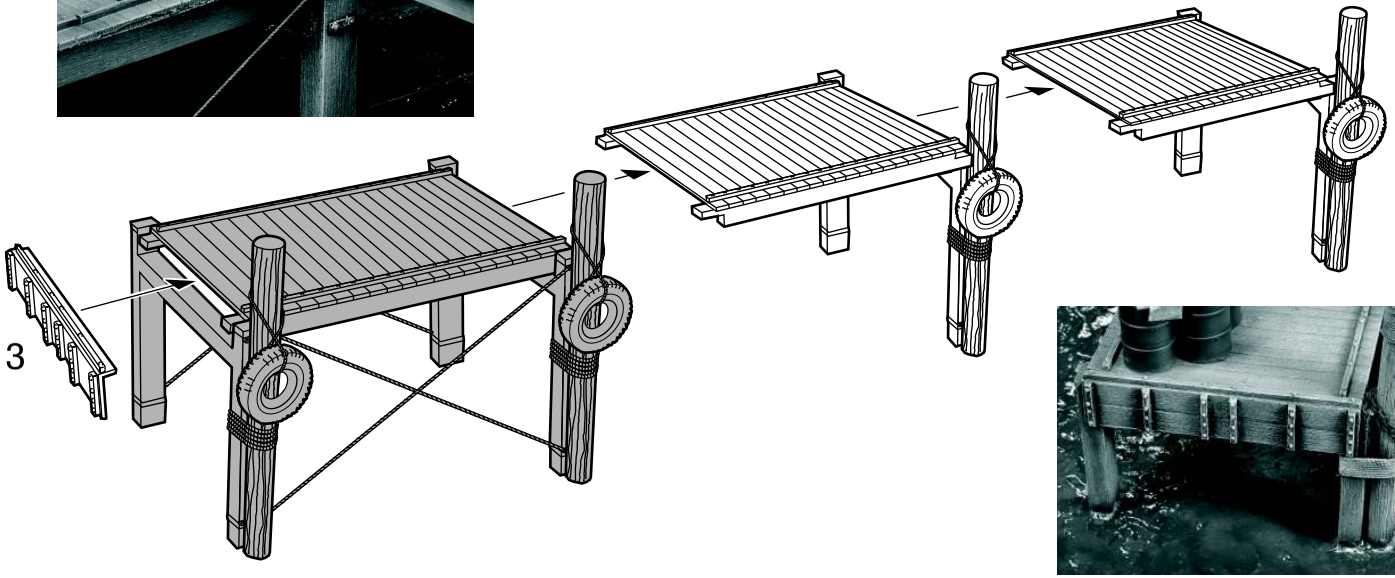

ROYAL MODEL - PO BOX 25 - 95039 TRECASTAGNI (CT) ITALY
E-mail: info@royalmodel.com - Internet: www.royalmodel.com
©(2009) ROYAL MODEL