ROYAL MODEL
DIORAMA ACCESSORIES

Diorama's Accessories
1/35 Scale

Railway Accessories (No. 2)

ITEM NO. 512

For best results in the assembling of resin parts use cyanoacrylate glue. Always remember to use cyanoacrylate glue in a well ventilated area. It is advisable before assembling to study well the instructions.

Number of the pieces.

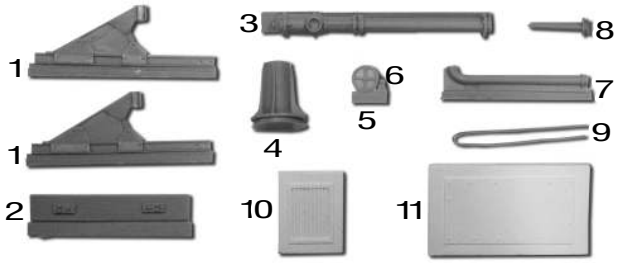

Master by Horacio Alcantara.

End of rail field construction

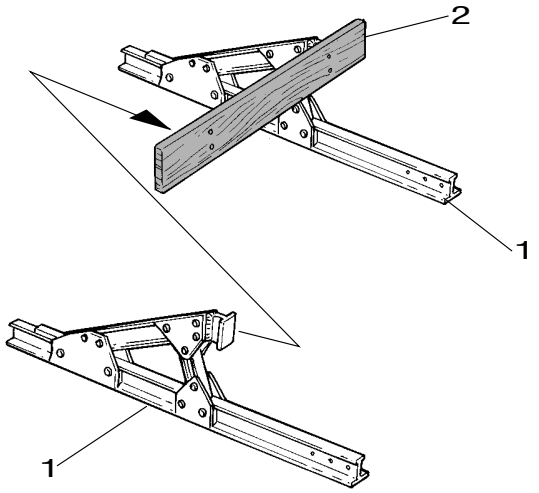

Water pump
(German design used too in eastern Europe)

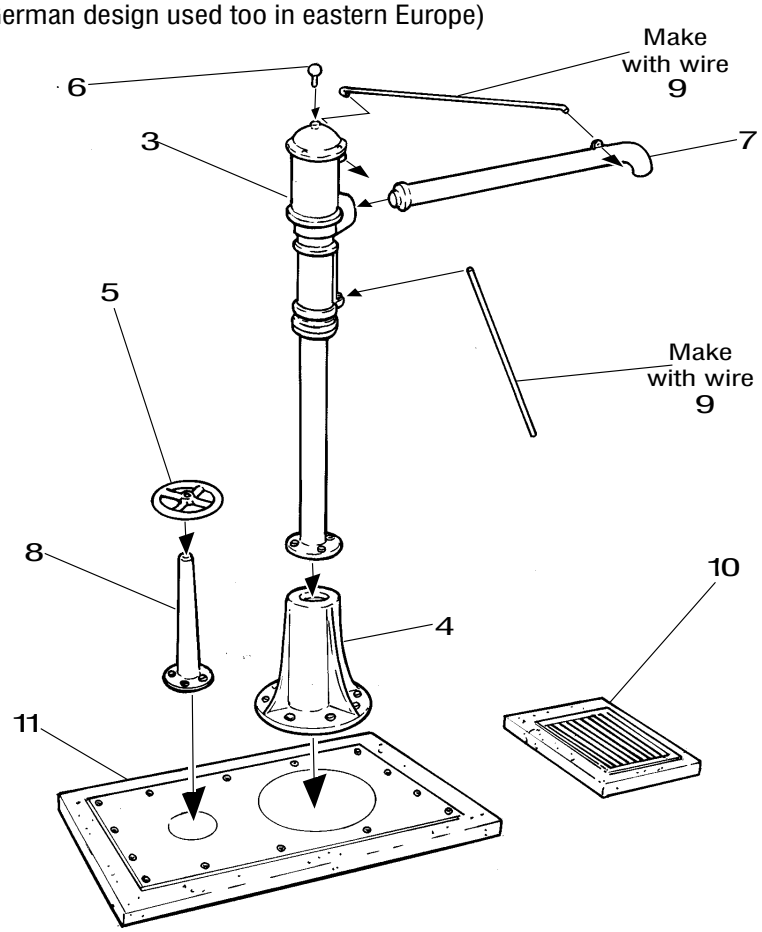

ROYAL MODEL - PO BOX 25 - 95039 TRECASTAGNI (CT) ITALY Tel. +39 95 780 0707-Fax +39 95 780 99 11
E-mail: info@royalmodel.com - Internet: www.royalmodel.com
©(2006) ROYAL MODEL