ROYAL MODEL
DIORAMA ACCESSORIES
ITEM NO. 511

Diorama's Accessories
1/35 Scale

Railway Accessories (No. 1)

For best results in the assembling of resin parts use cyanoacrylate glue. Always remember to use cyanoacrylate glue in a well ventilated area. It is advisable before assembling to study well the instructions which accompany this kit plus any other sufficient documentation.

Reicshbahn Signal Mast (1938-1945. used too in Eastern Europe)

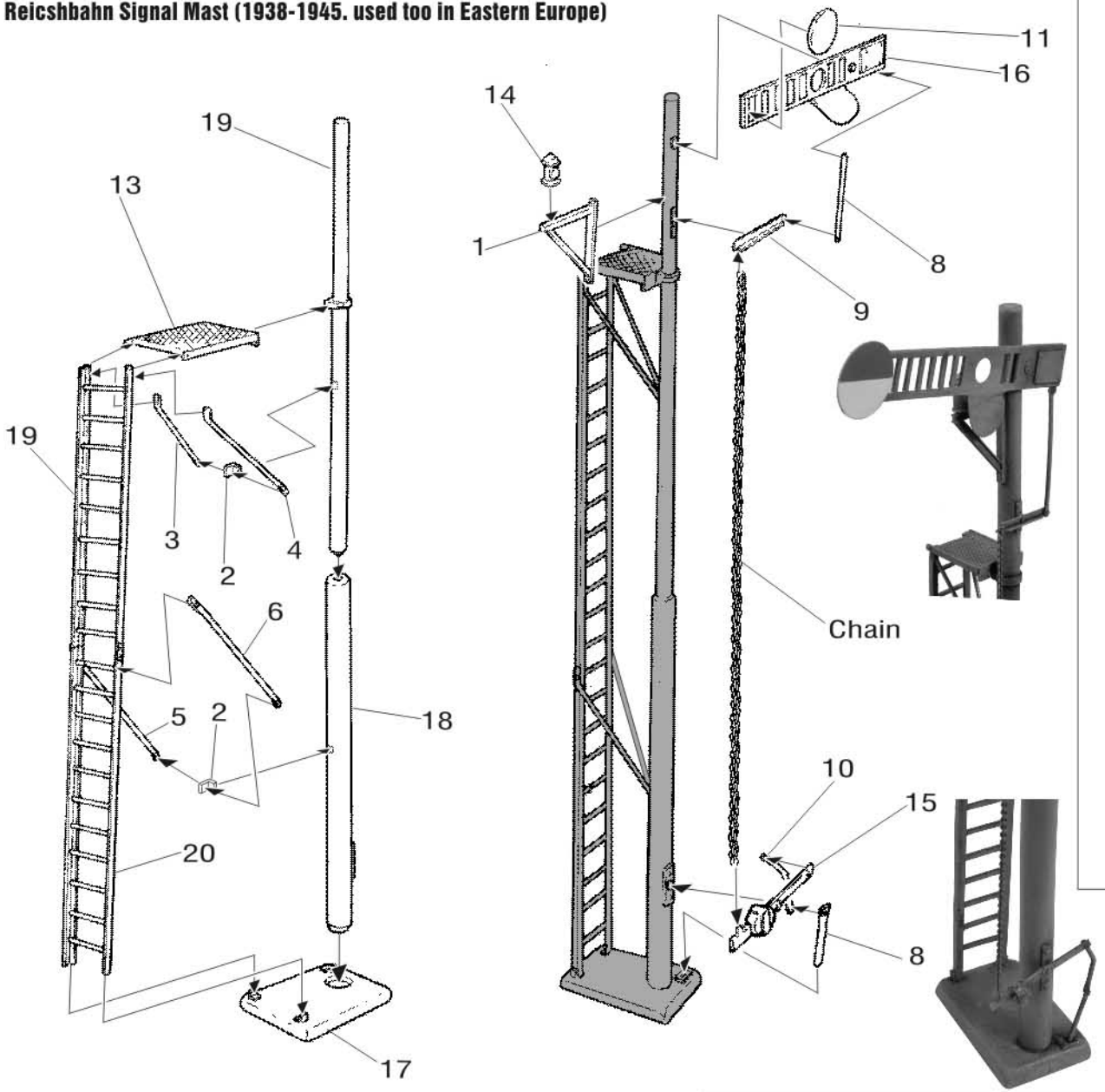

Control of Signals Hut
(1938-1945 used in German and Eastern Europe)

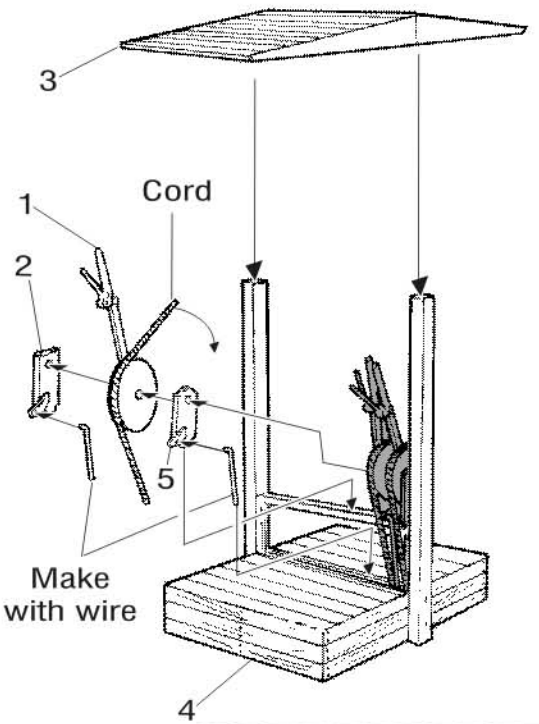



ROYAL MODEL - PO BOX 25 - 95039 TRECASTAGNI (CT) ITALY Tel. +39 95 780 0707-Fax +39 95 780 99 11
E-mail: info@royalmodel.com - Internet: www.royalmodel.com
©(2007) ROYAL MODEL