ROYAL MODEL
DIORAMA ACCESSORIES
Royal Model by Reale Roberto,
P.O. Box 25-95039-Trecastagni (CT) ITALY

Antique street lamp

No. 055
1/35

super accessories

For best results in the assembling of photo-etched and resin parts use cyanoacrylate glue.

Always remember to use

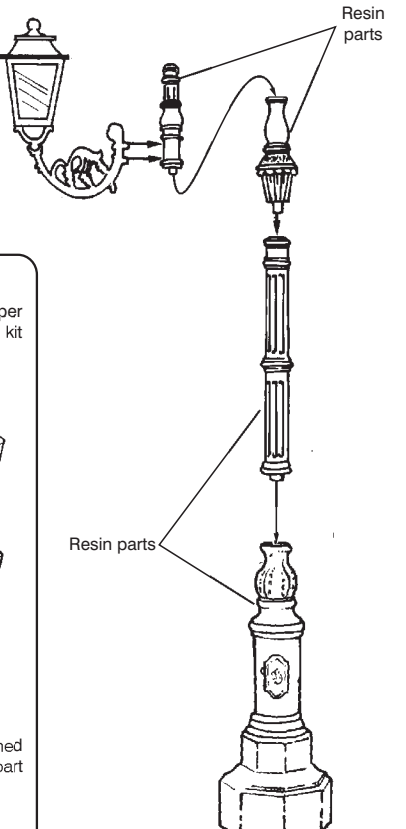

Make two parts

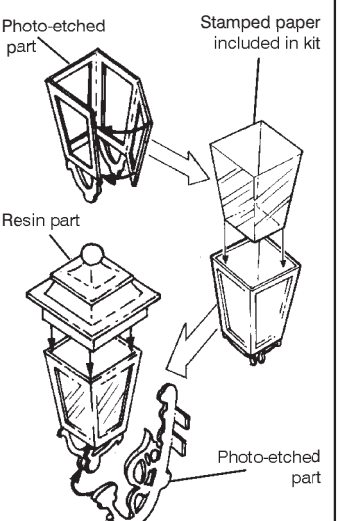

Drawings by **ROYAL MODEL** (1993)