ROYAL MODEL
DIORAMA ACCESSORIES

Willys MB

MICRODETAILS SET
1/35 Scale

ITEM NO.605

The parts included in this kit are to be assembled in conjunction with the Tamiya kit. For best results in the assembling of photo-etched and resin parts use cyanoacrylate glue. Always remember to use cyanoacrylate glue in a well ventilated area. Before assembling be sure to remove all the parts to be substituted with photo-etched parts. It is advisable before assembling to study well the instructions which accompany this kit plus any other sufficient documentation.It is advise to heat the metal parts before glueing, once the metal is hot it will be easier to bend.

ROYAL MODEL - Via E. Montale, 19- 95030 PEDARA (CT) ITALY
e-mail: info@royalmodel.com - Internet: www.royalmodel.com

- REPEAT SAME OPERATION FOR THE OTHER SIDE
- R RESIN PART
- ADD ROD
- X2 MAKE 2 PIECES
- REMOVE OR SUBSTITUTE THE PLASTIC KIT PART WITH ROYAL MODEL PART
- PK PLASTIC KIT PART

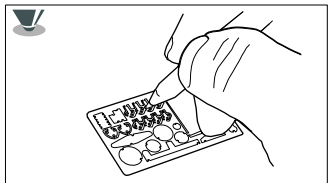

For to make the nuts to press into the references points with a pen as shown.

1

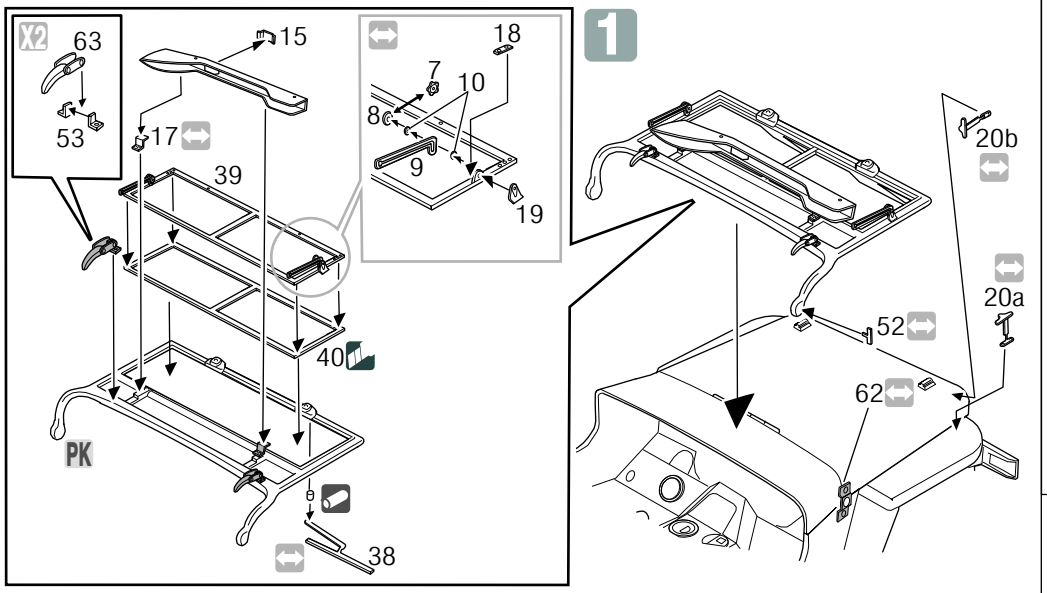

2

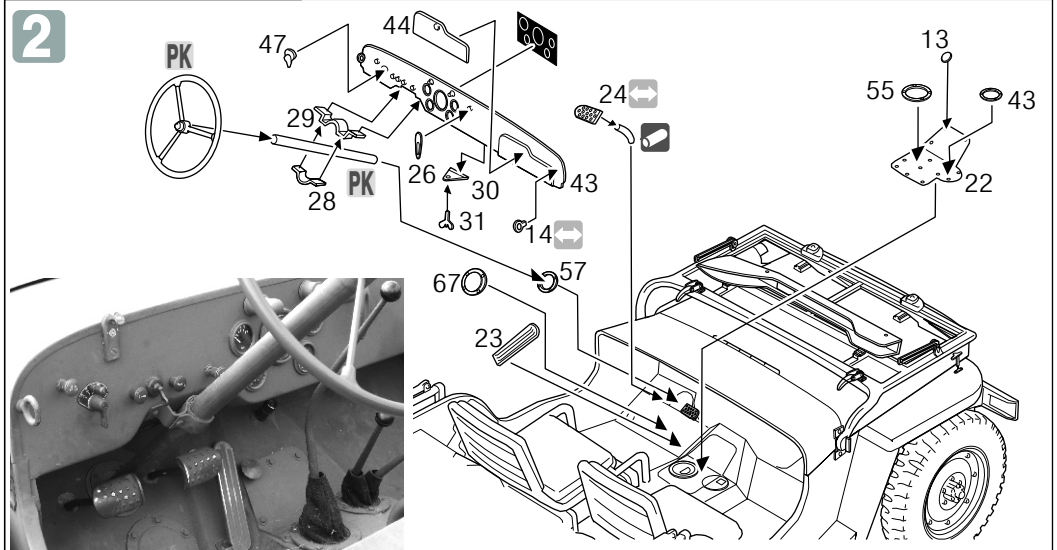

3

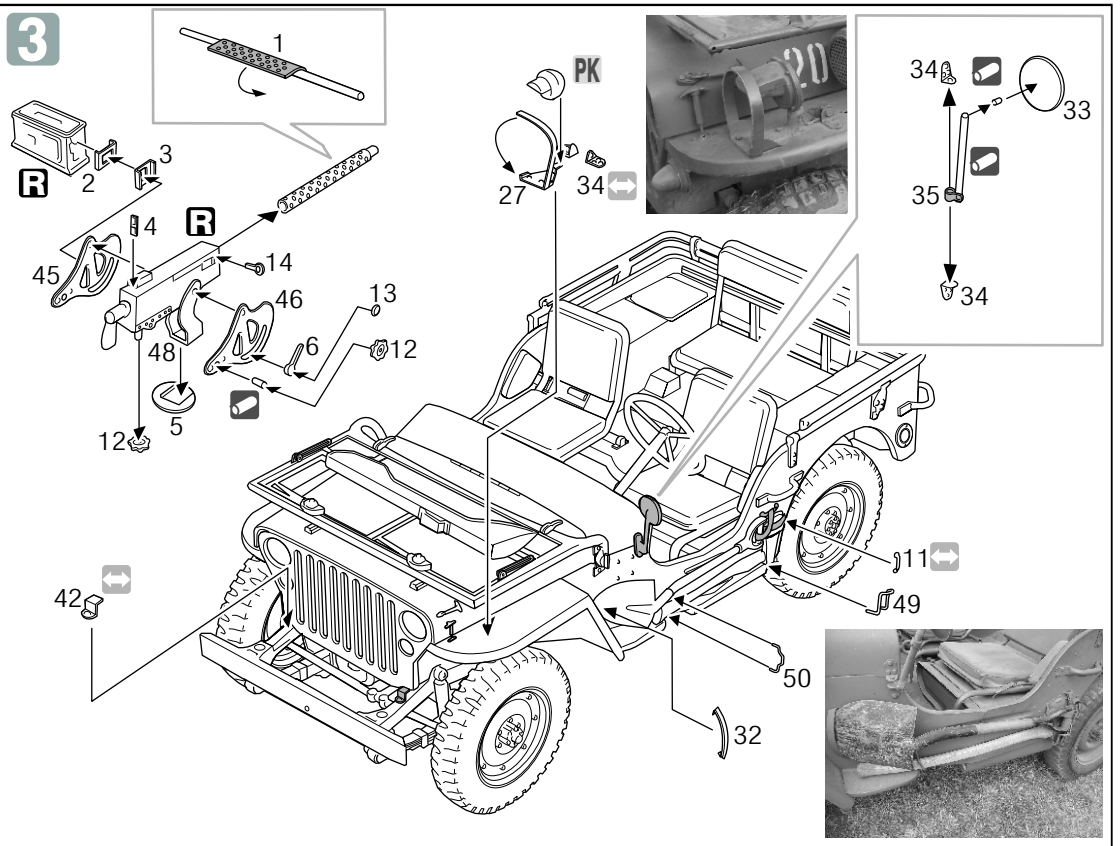

4

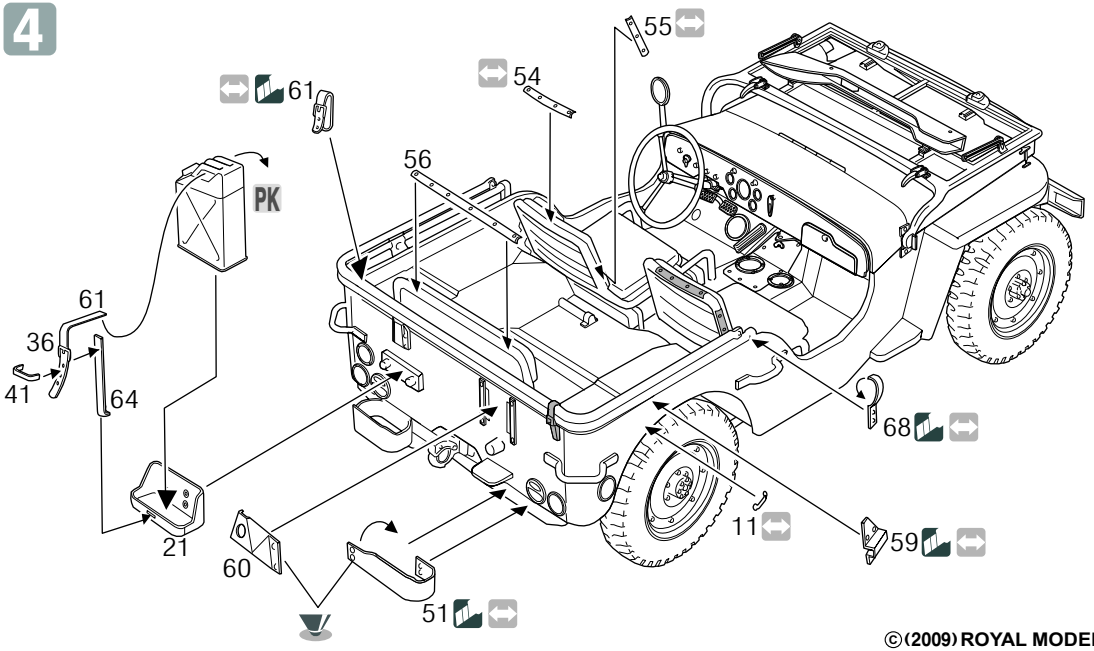

©(2009) ROYAL MODEL